Revision A (2020-12-25)

INSTRUCTION MANUAL

Original Instructions

Spindle Moulder

Model: E-305S

298001511

Contents

1. Foreword

This manual was conceived at the manufacturer and is an indivisible part of the delivery enclosed with the machine. It contains basic information for qualified operating staff and describes the surroundings and using ways of the machine for those it is indented. It contains also all necessary information for a correct and safe operating. The machine is equipped with various safety equipment protecting operator and machines well at usual technological using. These regulations, however, cannot sheet all other safety aspects. That is why operator must peruse and make sense of this manual before starting of machine use. Installation and operation mistakes will be foreclosed here with.
Do not try to start the machine before having read all instructions manual delivered with the machine and understood every function and technique.

2. Warranty Information

Limited Warranty
One year

Proof of Purchase
Please keep your dated proof of purchase for warranty and servicing purposes.

Limited Tool Warranty
We make every effort to ensure that this product meets high quality and durability standards, we warrants to the original retail consumer a 1-year limited warranty as of the date the product was purchased at retail and that each product is free from defects in materials. Warranty does not apply to defects due directly or indirectly to misuse, abuse, normal wear and tear, negligence or accidents, repairs done by an unauthorized service center, alterations and lack of maintenance, we shall in no event be liable for death, injuries to persons or property or for incidental, special or consequential damages arising from the use of our products.
To take advantage of this limited warranty, return the product at your expense together with your dated proof of purchase to us, we will either repair or replace the product if any part or parts covered under this warranty which examination proves to be defective in workmanship or material during the warranty period.

3. Machine Description

3.1 Feature Identification

A	Cabinet
B	Arm
C	Crosscut table
D	Crosscut Fence
E	Sliding table
F	Guard
G	Control panel
H	Table
I	Electrical box

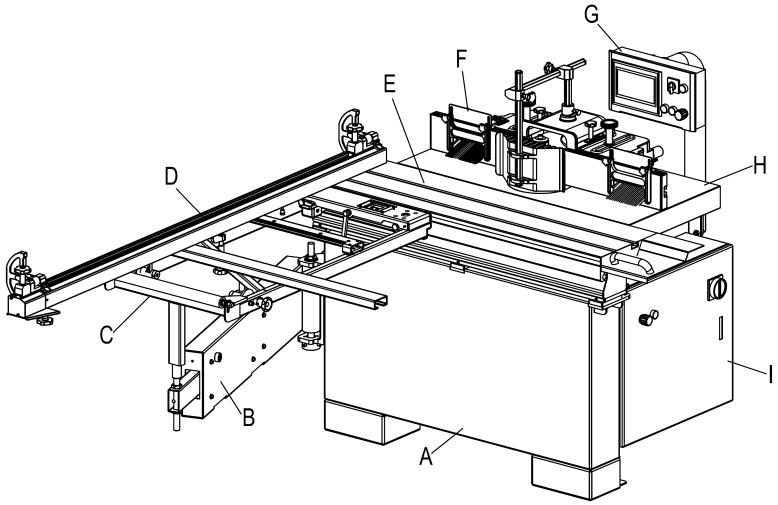

Fig.1

3.2 Intended Use

1. Purpose of the Machine

The machine enables semi-finished products made of wood or materials based on wood to be milled with a spindle

The machine is designed for operation performed by one worker only.

The machine must not be handled by children and youngsters in any manner.

2. Worker Qualifications

Only expert skilled in the field of wood-machining or a worker instructed and trained by such expert may operate the machine, regardless of the sex. While working on the machine, the operator must get familiar with these instructions and comply with any safety rules, regulations and provisions in force in the respective country.

3. Working Environment

The machine must be operated in a workshop environment, complying the environment classification danger of inflammable dust fire (BE2N2), the temperature of which does not exceed +40°C and does not drop below +5°C, the relative humidity of air is from 30% to 95% non-condensing, the height above the sea level is up to 1000m,

4. Machine Operator Positions

The shaper is intended to be operated from the following position:

On the left of the sliding table at the front of the machine, seen in the feed direction

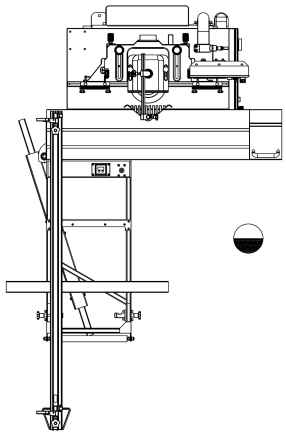

Fig.2

⚠ WARNING

The machine is prohibited to be used in a potentially explosive atmosphere!

3.3 Dimensions and Weights

Machine	Box Type	Net Weight (Kg)	Gross Weight (Kg)	Box Dimension (DxWxH mm)
E-305S	Machine box	485	515	1650x1150x1092
	Crosscut fence box	15	25	2000x320x170

3.4 Electrical Power Requirements

Since the power source differs in different areas, the requirements of the Label Specification pasted on the machine shall be strictly complied with.
Position of Label Specification: on the side of the main base unit.

List of the motor usage & Pre-wired voltage

Power Source: 380-415V / 3PH / 50(60)Hz

Motor(kW)	Voltage(V)	Freq.(Hz)	Nominal current (A)	Pre-wired	Cords
4	380-415V	50/60	10	380-415V/3PH	5

Power Source: 220V / 3PH /60Hz

Motor(kW)	Voltage(V)	Freq.(Hz)	Nominal current (A)	Pre-wired	Cords
5.5HP	220V	60	15	220V/3PH	4

Power Source: 440V / 3PH /60Hz

Motor(kW)	Voltage(V)	Freq.(Hz)	Nominal current (A)	Pre-wired	Cords
5.5HP	440V	60	10	440V/3PH	4

3.5 Noise

3.4.1 Reference Standards

The measurements of noise emission were conducted according to the EN ISO 11202 for the determination of sound pressure level at the operation positions. When the measured sound pressure levels at the operation positions exceed 85dB(A), the measurements of sound power levels were conducted according to EN ISO 3746.

3.4.2 Operating Conditions

The operating conditions for the noise measurement comply with the Annex A of ISO 7960:1995.

3.4.3 Testing Results

	NO LOAD	LOAD
L_w	83.3 dB(A)	94.7 dB(A)
L_P	68.2 dB(A)	79.7 dB(A)
Associated Uncertainty	4 dB(A)	

Measured made in accordance with EN ISO 3746:1995 and EN ISO 11202:1995.

Note: Background noise of measurement surrounding is 65.0dB (A).
The figures quoted are emission levels and are not necessarily safe working levels. Whilst there is a correlation between the emission and exposure levels, this cannot be used reliably to determine whether or not further precautions are required. Factors that influence the actual level of exposure of the workforce include the characteristics of the work room and the other sources of noise, etc., i.e. the number of machines and other adjacent processes. Also, the permissible exposure level can vary from country to country. This information, however, will enable the user of the machine to make a better evaluation of the hazard and risk.

3.6 Technical Parameters

For Imperial Cutter Arbor:

Models		E-305S	
Electrical	Power Source	220V / 3HP / 60Hz	440V / 3HP / 60Hz
	Motor	4kW(5.5HP)	
	Rated Current	13.9A	8A
	Circuit Break	20A	16A
Performance	Table Height	35”	
	Main Table Size	19-3/4" x 39-1/2"	
	Sliding Table Size	12-1/5” x 49-1/2"	
	Cutter Arbor Size	5/4"	
	Insert Opening	2-1/2", 4-1/4", 5-3/4", 8-3/4"	
	Max. Tool Height	5-1/2"	
	Spindle Stroke	6-7/8"	
	Spindle Tilting	-5°-45°	
	Max. Tool Size above the Table	8-5/8”	
	Max. Tool Size under the Table	6-7/8”	
	Max. Tool Size at 45°	5"	
	Spindle Speed	1500-5000rpm, 3000-10000rpm	
	Cutter Tilt	Right	
	Max. Length of Cross Cut Fence	118"	
Dimensions & Weights	Overall Size (DxWxH)mm	115.5” x 143.7” x 55.5”	
	Machine Foot Print	37.2" x 49.2”	
	Machine Net Weight	Approx. 1100pounds	
Construction	Sliding Table	T-6 Super Heavy Duty Extrusion	
	Machine Frame	High Strength 4mm/6mm Steel Welding	
	Control & Read-Out	Control with 17"touch screen SIEMENS	
	Trunnions	High Grade Cast Iron, Precisely Machined	
Power Transfer		Belt Drive	
Features		Electronic Angle Adjustment	
		Electronic Height Adjustment	

Remark:

1. Maximum work-piece sizes: 3000mm(L) x 1250mm(W) x 140mm(H).
   Minimum work-piece sizes: No specific requirement, always use a push stick when shaping small or narrow work pieces.
2. Every machine we produce is fitted with a name plate with its serial number. The number is also punched on the machine.
3. An exact description of the machine model and serial number will facilitate rapid and effective replies from our after-sales service.
4. Since the power source differs in different areas, the requirements of the Label Specification pasted on the machine shall be strictly complied with.
5. Position of Label Specification: on the side of the main base unit.

For Metric Cutter Arbor:

Models		E-305S
Electrical	Power Supply	380-415V / 3HP / 50(60)Hz
	Motor	4kW(5.5HP)
	Rated Current	10 A
	Circuit Break	16 A
Performance	Table Height	890mm
	Main Table Size	1000 x 500mm
	Sliding Table Size	310 x1250mm
	Cutter Arbor Size	35mm
	Insert Opening	65mm / 110mm / 146mm / 225mm
	Max. Tool Height	140mm
	Spindle Stroke	175mm
	Spindle Tilting	-5°-45°
	Max. Tool Size above the Table	220mm
	Max. Tool Size under the Table	175mm
	Max. Tool Size at 45°	125mm
	Spindle Speed	1500-5000rpm, 3000-10000rpm
	Cutter Tilt	Right
	Max. Length of Cross Cut Fence	3000mm
Dimensions & Weights	Overall Size (D x W x H)	2960x3650x1410mm
	Machine Foot Print	944 x 1250mm
	Machine Net Weight	Approx. 500Kg
Construction	Sliding Table	T-6 Super Heavy Duty Extrusion
	Machine Frame	High Strength 4mm/6mm Steel Welding
	Control & Read-Out	Control with 7" touch screen SIEMENS
	Trunnions	High Grade Cast Iron, Precisely Machined
Power Transfer		Belt Drive
Features		Electronic Angle Adjustment
		Electronic Height Adjustment

Remark:

1. Maximum work-piece sizes: 3000mm(L) x 1250mm(W) x 140mm(H).
Minimum work-piece sizes: No specific requirement, always use a push stick when shaping small or narrow workpieces.

2. Every machine we produce is fitted with a name plate with its serial number. The number is also punched on the machine.

3. An exact description of the machine model and serial number will facilitate rapid and effective replies from our after-sales service.

4. Since the power source differs in different areas, the requirements of the Label Specification pasted on the machine shall be strictly complied with.

5. Position of Label Specification: on the side of the main base unit.

4. Safety Regulations

4.1 General Safety Instructions

1. KNOW YOUR MACHINE.

Read and understand the owner manual and labels affixed to the machine. Learn its application and limitations as well as its specific potential hazards;

2. GROUND THE MACHINE.

In the event of the electrical short, grounding reduces the risk of electrical short;

3. KEEP GUARDS IN PLACE.

Keep in good working order, properly adjusted and aligned;

4. REMOVE ADJUSTING KEYS AND WRENCHES.

Form habit of checking to see that keys and adjusting wrenches are removed from machine before turning it on;

5. KEEP WORK AREA CLEAN.

The working floor area around the machine should be leveled and kept well-maintained, unobstructed and free from loose material, e.g. chips and off-cuts;

6. AVOID DANGEROUS ENVIRONMENT.

Don't use machines in damp or wet locations or expose them to rain. Keep work area well lit and provide adequate surrounding work space;

7. KEEPCHILDREN AWAY.

All visitors should be kept a safe distance from work area;

8. MAKE WORKSHOP CHILD-PROOF.

With padlocks, master switches or by removing starter keys;

9. USE PROPER SPEED.

A machine will do a better and safer job when operated at the proper speed;

10. USE RIGHT MACHINE.

Don't force the machine or the attachment to do a job for which it was not designed;

11. WEAR PROPER APPAREL.

Do not wear loose clothing, gloves, neckties or jewelry (rings, watch) because they could get caught in moving parts. Non-slip footwear is recommended. Wear protective hair covering to contain long hair. Roll up long sleeves above the elbows;

12. DON'T OVER REACH.

Keep proper footing and balance at all times;

13. MAINTAIN MACHINE WITH CARE.

Keep tools sharp and clean for best and safest performance. Follow instructions for lubricating and changing accessories;

14. DISCONNECT MACHINES.

Before servicing, when changing accessories or attachments;

15. AVOID ACCIDENTAL STARTING.

Make sure the switch is in the ''OFF' 'position before plugging in;

16. USE RECOMMENDED ACCESSORIES.

Consult the manual for recommended accessories. Follow the instructions that accompany the accessories. The use of improper accessories may cause hazards;

17. NEVER STAND ON MACHINE.

Serious injury could occur if the machine tips over.

18. CHECK DAMAGED PARTS.

Before further use of the machine, a guard or other parts that are damaged should be carefully checked to ensure that they will operate properly and perform their intended function.

19. NEVER LEAVE MACHINE RUNNING UNATTENDED.

Turn power off. Don't leave any machine running until it comes to a complete stop;

20. LIGHTING SHALL BE PROVIDED.

Adequate general or localized lighting shall be provided.

4.2 Specific Safety Instructions for Shaper

1. Serious personal injury may occur if normal safety precautions are overlooked or ignored. Accidents are frequently caused by lack of familiarity or failure to pay attention. Obtain advice from supervisor, instructor, or another qualified individual who is familiar with this machine and its operations.
2. All electrical connections and wiring should be made by qualified personnel only.
3. To reduce the risk of electrical shock. Do not use this machine outdoors. Do not expose to rain or moisture, store indoors in a dry area.
4. Stop using this machine, if at any time you experience difficulties in performing any operation. Contact your supervisor, instructor or machine service center immediately. Reporting of faults or defects in the machine, including guards or tools, as soon as they are discovered.
5. Do not leave the unit plugged into the electrical outlet. Unplug the unit from the outlet when not in use and before servicing, performing maintenance tasks, or cleaning.
6. Always turn the power switch “OFF” before unplugging the shaper.
7. Do not use the shaper as a toy. Do not use near or around children.
8. Keep hands away from cutting tool.
9. Never run stock between the fence and the cutter.
10. Always use a miter gauge and clamp attachment when shaping small pieces. The fence should be removed during this operation.
11. Always feed against the rotation of the cutter.
12. Work-piece to be adequately supported during machining/feeding using, where necessary, additional support, e.g. for long work-pieces.
13. Keep cutters sharp and free from rust and pitch, following tool manufacturers’ instructions for use, adjustment and repair of tools.
14. Only use flat workpieces in the shaper, never use warped or twisted lumber.
15. Never take off too much material in one pass. Make several lighter passes.
16. Set up operations whenever possible to have the cutters under the workpiece, always use proper speed setting for the cutter being used.
17. Not removing any splinters or other part of the work-piece from the cutting area while the machine is running.
18. Ensure the maximum rotational speed marked on the tools is not exceeded.
19. Make sure cutters are properly secured before starting shaper.
20. Use guards, guides, and hold-down wherever possible, not using the machine unless the guards and other safety devices necessary for machining are in position, in good working order and properly maintained.
21. Do not perform any operation freehand. Use the fence for straight shaping.
22. Push blocks or push sticks shall be used in circumstances where it is necessary to push the workpiece against the fence.
23. Avoid awkward operations and hand positions where a sudden slip could cause your hand to move into the spinning blade.
24. The machine shall be connected to an external chip and dust extraction system; the dust extraction equipment is to be switched on before commencing machining.
25. Period check the brake function to make sure the stop time of the saw blade is less than 10s.
26. Only tools suitable for hand feed machines, conforming to EN 847-1 and EN 847-2:2013 and marked MAN shall be used in order to reduce severity of injuries and kickback speed.
27. When using milling tools with diameter ≥16 mm and circular saw-blades, they shall conform to EN 847-1:2013 and EN 847-2:2013; tool holders shall conform to EN 847-3:2013; Shank milling tools with cutting circle diameter lower than 16 mm can be used without restriction.
28. Use table rings or table insert to close the gap between the table and the spindle to a minimum.

29. Fit the tooling to the machine to operate in the correct direction of rotation. Avoid injury when on use of tool carriers and handling tools.
30. Don't misuse, foreseeable misuse includes, e.g. feeding small work-pieces without safety appliance, mounting of a saw blade on the arbor instead of milling tools and feeding work-pieces in the same direction as of the running tool (climb cutting).

4.3 Residual Risks

1. Take precautions to reduce the hazard of inhalation of harmful dusts (e.g. wearing a dust mask).
Information on factors that influence exposure to dust, including:
1) The level of tool and machine maintenance
2) The material being machined
3) The importance of local extraction (capture at source),
4) The proper adjustment of hoods/baffles/chutes
5) The external chips and dust extraction system connected t the machine need to comply with the parameters stated in this instruction for use.
2. Wear ear protection to prevent hearing loss.
Instructions on factors that influence exposure to noise, including:
1) The correct choice of tools
2) The correct speed selection
3) The tools and machine maintenance
4) The type of material being machined
5) The use of any accessories provided
6) The use of ear protection
3. Always wear safety glasses, also use a face or dust mask if cutting operation is dusty.
4. Protect against the hazard of being cut when handling cutters into the machine or doing maintenance.
5. Do not try to remove chips while the cutter is running and the shaper unit is not in the rest position.
6. Do not try to use the machine unless all of the guards and other safety devices necessary for the particular operation are in good working order.
7. In case of power supply failure, the tool may rotate for more than maximum run-down time.

4.4 Safety Equipment

A push block ***(Fig.3)*** and A push stick ***(Fig.4)*** must be used

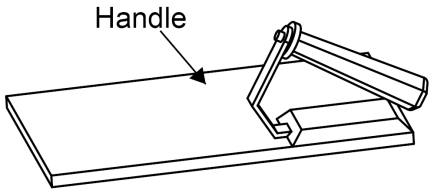

Fig.3

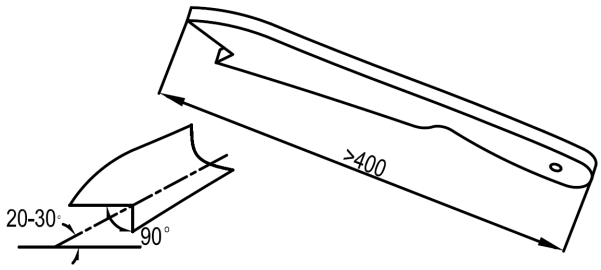

Fig.4

4.5 Safety Labels on the Machine

Here below you will find the warning labels that are attached to the machine and illustrated in the instruction.***(see Fig.5)***

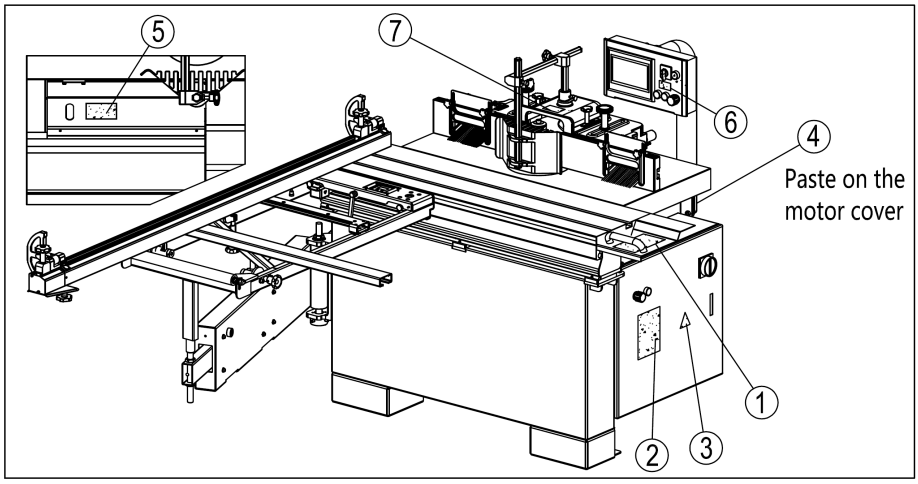

Fig.5

1. Warning for residual risks ***(Fig.5-1)***

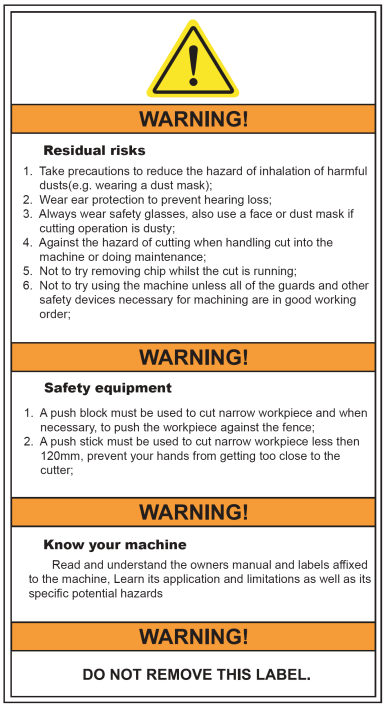

WARNING!

Residual risks

1. Take precautions to reduce the hazard of inhalation of harmful dusts(e.g. wearing a dust mask);
2. Wear ear protection to prevent hearing loss;
3. Always wear safety glasses, also use a face or dust mask if cutting operation is dusty;
4. Against the hazard of cutting when handling cut into the machine or doing maintenance;
5. Not to try removing chip whilst the cut is running;
6. Not to try using the machine unless all of the guards and other safety devices necessary for machining are in good working order;

WARNING!

Safety equipment

1. A push block must be used to cut narrow workpiece and when necessary, to push the workpiece against the fence;
2. A push stick must be used to cut narrow workpiece less then 120mm, prevent your hands from getting too close to the cutter;

WARNING!

Know your machine

Read and understand the owners manual and labels affixed to the machine, Learn its application and limitations as well as its specific potential hazards

WARNING!

DO NOT REMOVE THIS LABEL.

Fig.5-1

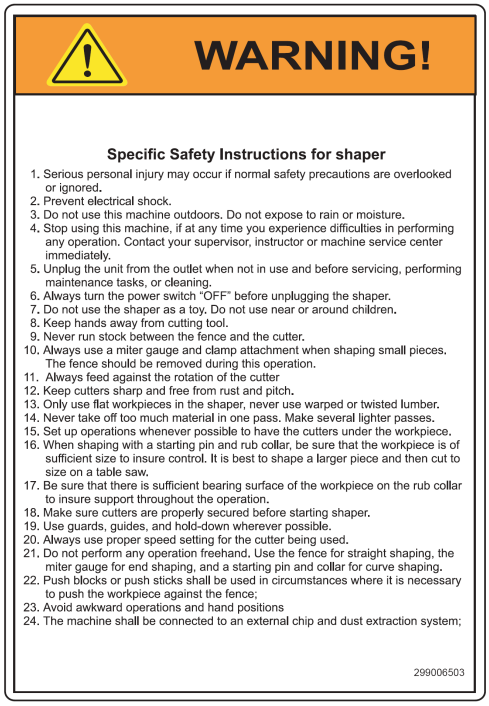

WARNING!

Specific Safety Instructions for shaper

1. Serious personal injury may occur if normal safety precautions are overlooked or ignored.
2. Prevent electrical shock.
3. Do not use this machine outdoors. Do not expose to rain or moisture.
4. Stop using this machine, if at any time you experience difficulties in performing any operation. Contact your supervisor, instructor or machine service center immediately.
5. Unplug the unit from the outlet when not in use and before servicing, performing maintenance tasks, or cleaning.
6. Always turn the power switch "OFF" before unplugging the shaper.
7. Do not use the shaper as a toy. Do not use near or around children.
8. Keep hands away from cutting tool.
9. Never run stock between the fence and the cutter.
10. Always use a miter gauge and clamp attachment when shaping small pieces. The fence should be removed during this operation.
11. Always feed against the rotation of the cutter
12. Keep cutters sharp and free from rust and pitch.
13. Only use flat workpieces in the shaper, never use warped or twisted lumber.
14. Never take off too much material in one pass. Make several lighter passes.
15. Set up operations whenever possible to have the cutters under the workpiece.
16. When shaping with a starting pin and rub collar, be sure that the workpiece is of sufficient size to insure control. It is best to shape a larger piece and then cut to size on a table saw.
17. Be sure that there is sufficient bearing surface of the workpiece on the rub collar to insure support throughout the operation.
18. Make sure cutters are properly secured before starting shaper.
19. Use guards, guides, and hold-down wherever possible.
20. Always use proper speed setting for the cutter being used.
21. Do not perform any operation freehand. Use the fence for straight shaping, the miter gauge for end shaping, and a starting pin and collar for curve shaping.
22. Push blocks or push sticks shall be used in circumstances where it is necessary to push the workpiece against the fence;
23. Avoid awkward operations and hand positions
24. The machine shall be connected to an external chip and dust extraction system;

299006503

Fig.5-2

2. Specific Safety Instructions for Shaper. ***(Fig.5-2)***

3. Caution!
   All electrical operation and maintenance shall be done by qualified electricians!
   All electrical operation must be carried out in according to electrical instruction!

Fig.5-3

Fig.5-4

WARNING!

DO NOT OPERATE SAW WITH THIS MOTOR COVER OPEN.

299105102

4. Warning for the motor cover opening. ***(Fig.5-4)***

5. Warning for the choice of tools & speed. ***(Fig.5-5)***

Tool Diameter(mm)														
60	hazard-bad machining conditions													31
80												33	38	42
100									34	37	39	42	47	52
120							35	38	41	44	47	50	57	63
140						37	41	44	48	51	55	59	66	73
160					38	42	47	50	54	59	63	67	75	84
180				37	42	47	53	57	61	66	71	75	85	
200			37	42	47	52	59	63	68	73	79	84		
220		35	40	46	52	58	65	70	75	81		bursting hazard		
Tool Spindle Speed (min^{-1})	2800	3000	3500	4000	4500	5000	5500	6000	6500	7000	7500	8000	9000	10000

Change of Revolutions

Fig.5-5

6. Warning for the cutter rotation direction. ***(Fig.5-6)***

Fig.5-6

7. Warning for the fence using. ***(Fig.5-7)***

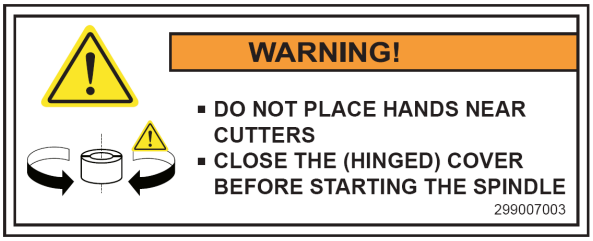

Fig.5-7

4.6 Safety Devices

Every time, before you operate the machine, you must check if the **Disconnect switch, Emergent stop buttons, Interlocking switches** is in order.

When you set up, operate or service the machine , you must pay high attention to avoid the potential dangers.

Encountering the event of accident or breakdown, you must press the Emergent stop buttons, and turn the disconnect switch to cut the power.

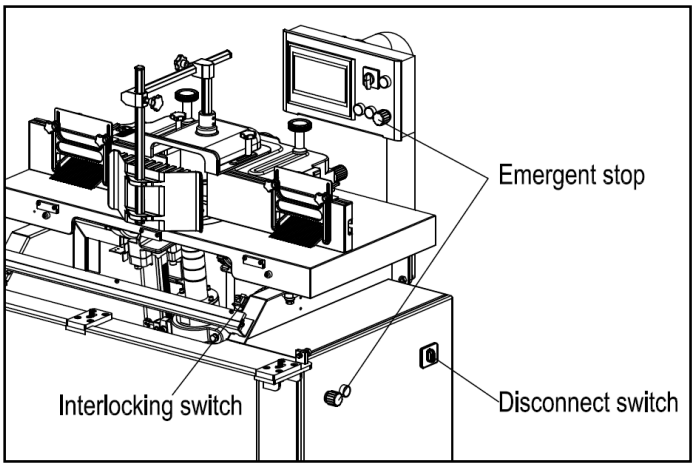

Fig.6

Disconnect switch:
Interval：8 hours
Position：As ***Fig.6***
Operation: Turn the switch;

Emergent stop buttons:
Interval：8 hours
Position：2 emergency stop buttons are separately located, as ***Fig.6.***
Operation：Press the emergent stop buttons when emergency.

Interlocking switch
Interval：8 hours
Position：As ***Fig.6***
Operation：When open the cover, the motor power will be off.

⚠ NOTICE

Emergent stop buttons are prohibited to act as normal stop function.

5. Installation of the Machine

5.1 Transportation of Machines

5.1.1 Transportation and storage

This machine has been well packaged and rust preventive measures have been taken at the factory. Care should still be taken to insure that no damage comes from rough handling while moving. Ambient temperatures of -25 to 55℃can be endured by this machine.
Be careful not to expose this machine to rain or other severe weather.

⚠ WARNING

- **While transporting or handling the machine, be careful and let the activity be done by qualified personnel especially trained for this kind of activity!**
- **While the machine is being loaded or unloaded, make sure that no person or subject gets pressed by the machine!**
- **Select proper transportation device according to the weight of the machine.**
- **Make sure the lifting capacity of transportation device is competent for the weight of the machine.**

5.1.2 Transportation before unpacking

This machine is packed in a robust wooden crate. ***Fig. 7*** shows the device which can be used to transport the packed crate.

Fig.7

5.1.3 Confirmation after unpacking

When open the packing box, please pay attention to the following items. If you have any questions, please contact us..

1) Has the machine been damaged in transportation?
2) All accessories and documents are included with the machine.
3) The product is consistent with the contract.
2) The specifications on the machine label are consistent with the contract.

5.1.4 Transportation after unpacking

When transport the machine with a folk lift, firstly find the center of gravity of the machine, insert the fork below the machine and then lift carefully.

5.2 Unpacking

Your machine was carefully packaged for safe transportation. Remove the packaging materials from around your machine and inspect it. If you discover that the machine is damaged, please immediately call Customer Service for advice. Save the containers and all packing materials for possible inspection by the carrier or its agent. Otherwise, filing a freight claim can be difficult.

5.2.1 **Machine box contents**

Machine Box Contents:	**Qty**
A. Main unit	1
B. Crosscut table	1
C. Fence Assembly	1
D. Cover	1
E. Control Panel	1
F. Bracket for control panel	1

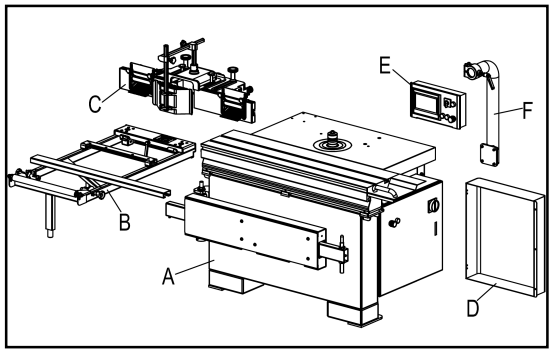

Fig.8

5.2.2 **Crosscut fence box contents**

Crosscut Fence Box Contents:	**Qty**
A1.Stop Plate	2
B1. Cross-cutting Fence	1
C1. Support Bar	1
D1. Handle	1

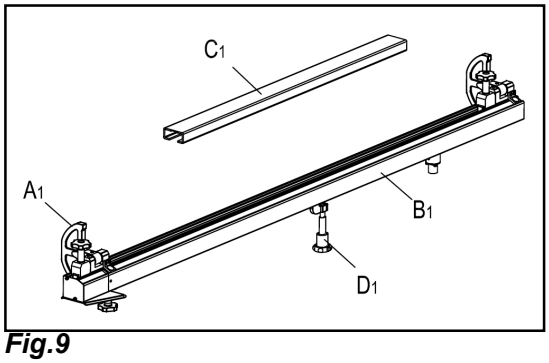

Fig.9

5.3 Safety Measure before Installation

Foundation plan ***(Fig.10)***

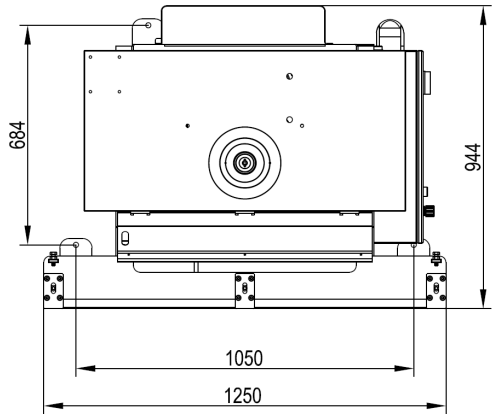

Fig.10

Space Requirements ***(Fig.11)***

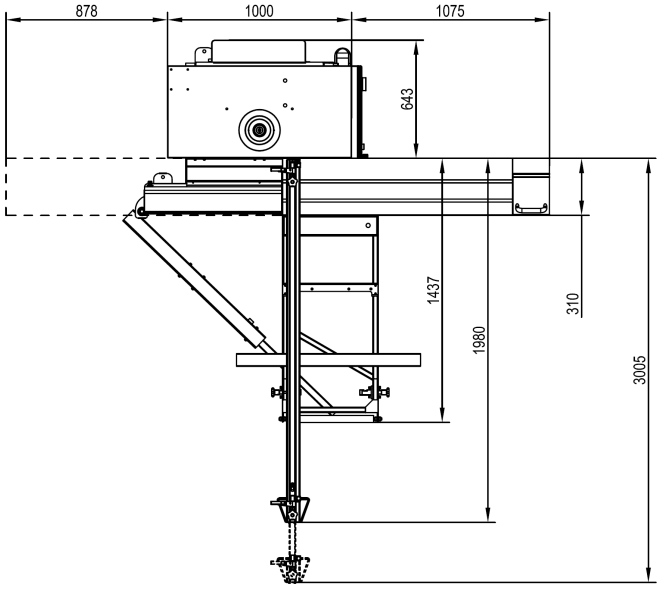

Fig.11

5.4 Installation

5.4.1 Positioning the base unit

This unit is very heavy, serious personal injury may happen if safe moving methods are no followed! To be safe, you need assistance and power equipment when moving the shipping crate and the machine!

⚠ WARNING

Do not connect machine to electricity before installation is completed!

Main base is mounted at the wooden pallet with three bolts, take out these bolts, separate the main base from the wooden pallet and move the main base to suitable place.

Floor required：*(See Fig.10)*

The floor must have enough loading strength for the machine weight and should be flat and level.

If necessary, fix the machine to the floor with three bolts according the foundation plan ***(Fig.10).***

Space required：*(see Fig.11)*

The machine should be placed at least 800 mm away from the wall.

When the main base is placed, screw the bolts A to touch the ground, then lock it. ***(See Fig.12)***

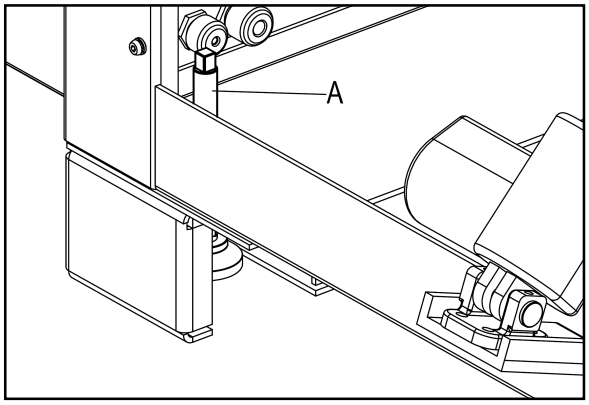

Fig.12

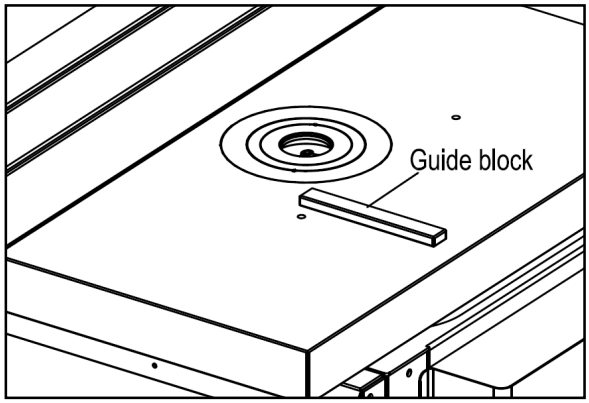

Fig.13

5.4.2. Fence assembly installation

1) Mount the guide block to the table. ***(Fig.13)***

2) Install the fence by placing the main fence (A) on the table surface. ***(See Fig.14)***

3) Lock the fence to the table by threading the two locking handles(B) into the holes in the table located behind the spindle. ***(See Fig.14)***

4) Attach the Guard Mounting Bracket (E) to the red top cover(C), then mount the bar and side guard(F). (***See Fig.15)***

5) Use the two locking handles (D) to lock the red top cover(C).(***See Fig.15)***

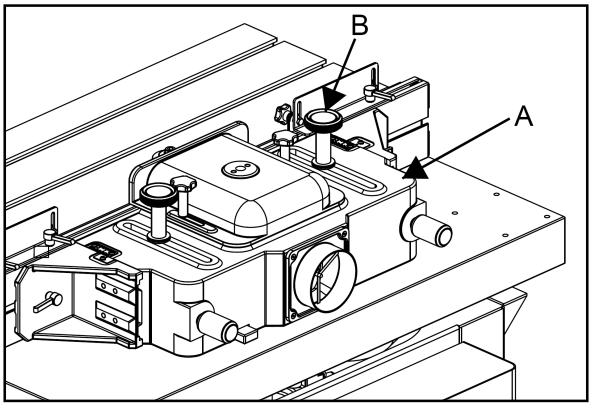

Fig.14

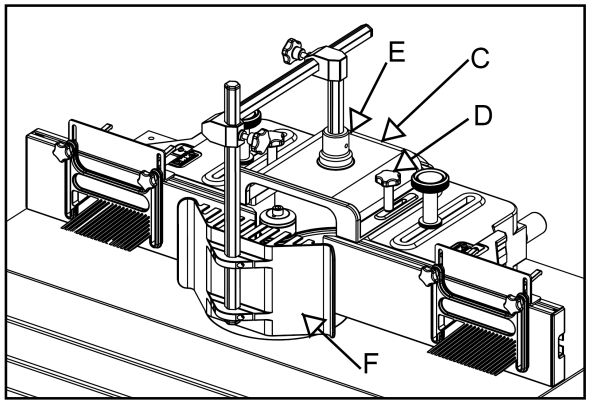

Fig.15

5.4.3 Cross-cut table installation

a. Slide the crosscut table into the T-slot on the side of the sliding table.
b. Align the screw shaft (B) on the swing arm to the hole on the bottom of crosscut table support, and adjust the screws (C) and (D) to keep the surface of the crosscut table parallel to the surface of the sliding table, then tighten the screws (C) and (D). Lock the crosscut table with handle A, (see ***Fig.16***).
c. Install the crosscut fence into two positioning holes on the crosscut table (Fig.16). Lock the fence to the crosscut table by turning the knobs (E) and (F). As shown in *Fig.17*, connect the miter angle sensor with the display by the provided network cable.
Release the knob (E), you can swing the fence and lock it in any angle (±45 degree).
d. The knob (G) can be used to quick lock the fence to 90 degree, see ***Fig.17***.
There is a limited block at the bottom of the fence, you can lock or release the block by turning the knob (G), turn right to release, turn left to lock it by lock block(J).
e. You can adjust the fence stop position by releasing the nut (I) and turning the screw (H) in or out, see ***Fig.17***.

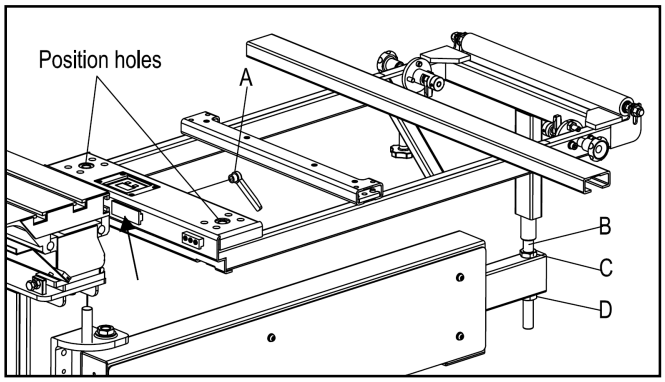

Fig.16

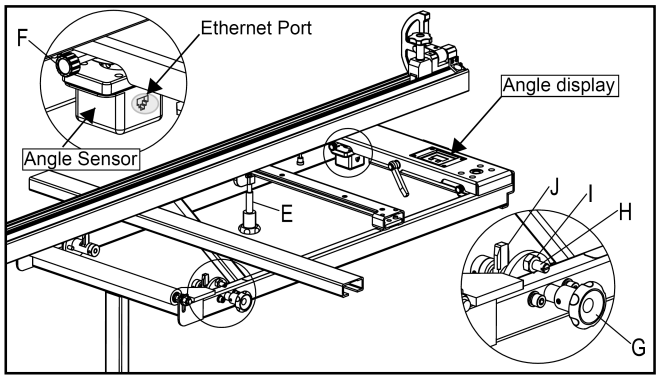

Fig.17

5.4.4 Install the touch screen bracket

1. Install the bracket (A) to the main cabinet with four M10X25 cap screws(B), as ***Fig.18.***

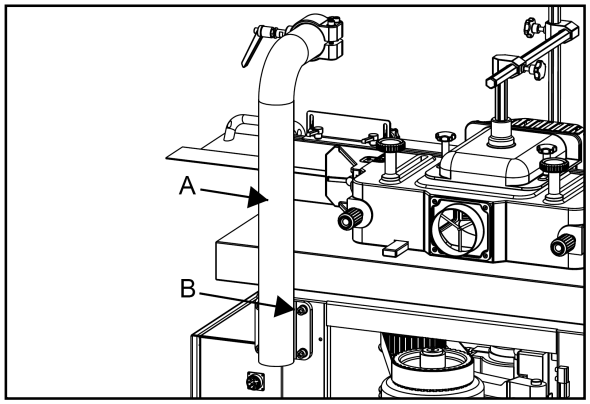

Fig.18

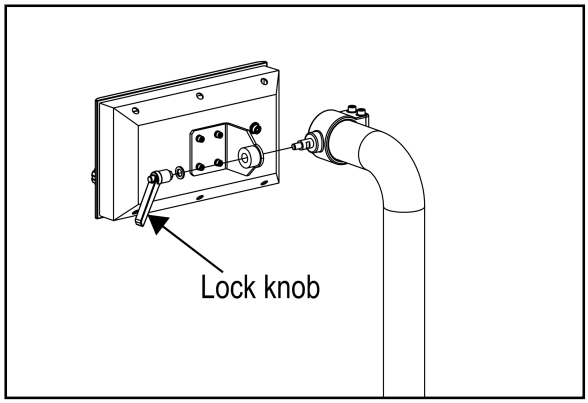

Fig.19

2. Install and lock the touch screen by turning the locking knob, as shown in ***Fig.19***,
3. Plug the ports "A", "B", "C" and "D" into the corresponding sockets, as ***Fig.20***

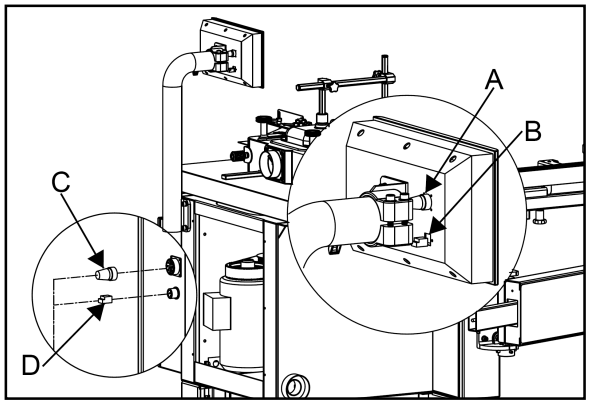

Fig.20

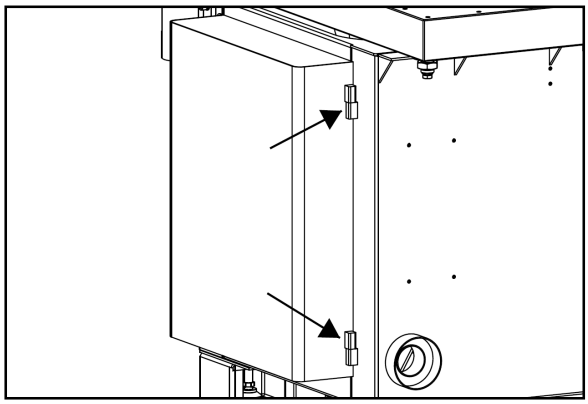

Fig.21

5.4.5. Back cover installation

Slide the back cover onto the hinges which are pointed in ***Fig.21***, then lock the door with the screws on the other side.

5.4.6 Connecting the extraction system

⚠ WARNING

The dust collection equipment needs to be switched on before start the machine;
Dust collection device should be prepared by customer.

The outlet diameter of port **A** is 100mm, see ***Fig.22***
The outlet diameter of port **B** is 100mm, see ***Fig.22***
The required air speed is 20m/s for vacuum dust collector. The air speed of dust collector device (in accordance with EN 12779:2004) should not lower than 20m/s to ensure that the dust from the machine can be exhausted. User must wear dust-proof mask.
Required air flow:1500 m³/h;

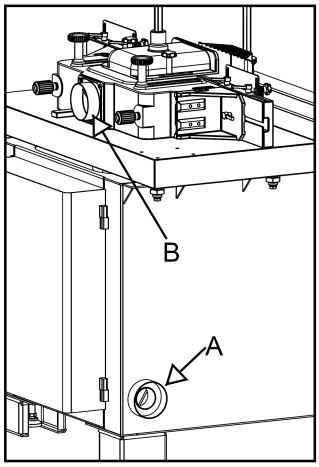

Fig.22

5.4.7 Electrical installation

Since the power source differs in different areas, the requirements of the Label Specification pasted on the machine shall be strictly complied with.
Position of Label Specification: on the side of the main base unit.

⚠ WARNING

Wiring should only be done by professional electricians.
All wirings in the cabinets should be protected against the direct contact and at least meet the standard of IP2X when finishing electrical installation.
All the exposed conductive parts should be connected to the protective bonding circuit.
Close and lock the door of cabinet, take off the keys and keep them well stored after finishing installation.

⚠ NOTICE

There should be enough space around the machine and the cabinets for convenient maintenance.
The machine should be installed in a workshop with good illumination and ventilation.
Over-voltage protection device should be provided by end user on spot.

⚠ WARNING

Entrust this operation to qualified personnel. Always make sure the machine is properly grounded.

Check that if the voltage and frequency which are shown on the machine's name plate is corresponded to the electric power supply voltage and frequency you will use for the machine.
The circuit breaker shall be installed for supplying electric power to this machine, in order to protect operator against electrical shock caused by indirect shock

For Power Supply 440V / 3HP / 60Hz: the circuit breaker will be 16A.
For Power Supply 220V / 3HP / 60Hz: the circuit breaker will be 20A.
For Power Supply 380-415V / 3HP / 50(60)Hz: the circuit breaker will be 16A.

Wiring:
Complete the electrical connection according to the electrical drawings.

Checking:
After finishing wiring on the spot, check the following items at least:
Check the wiring of machine.
Check the direction of motors and change wiring if necessary.
Check the components for defects, such as loosening or damages.
Check the functions of safety devices (such as interlocked guards and emergent stop buttons).
Check the direction of motors and change the phases if necessary.
Check the functions of all limited switches.

ELECTRICAL CONNECTIONS

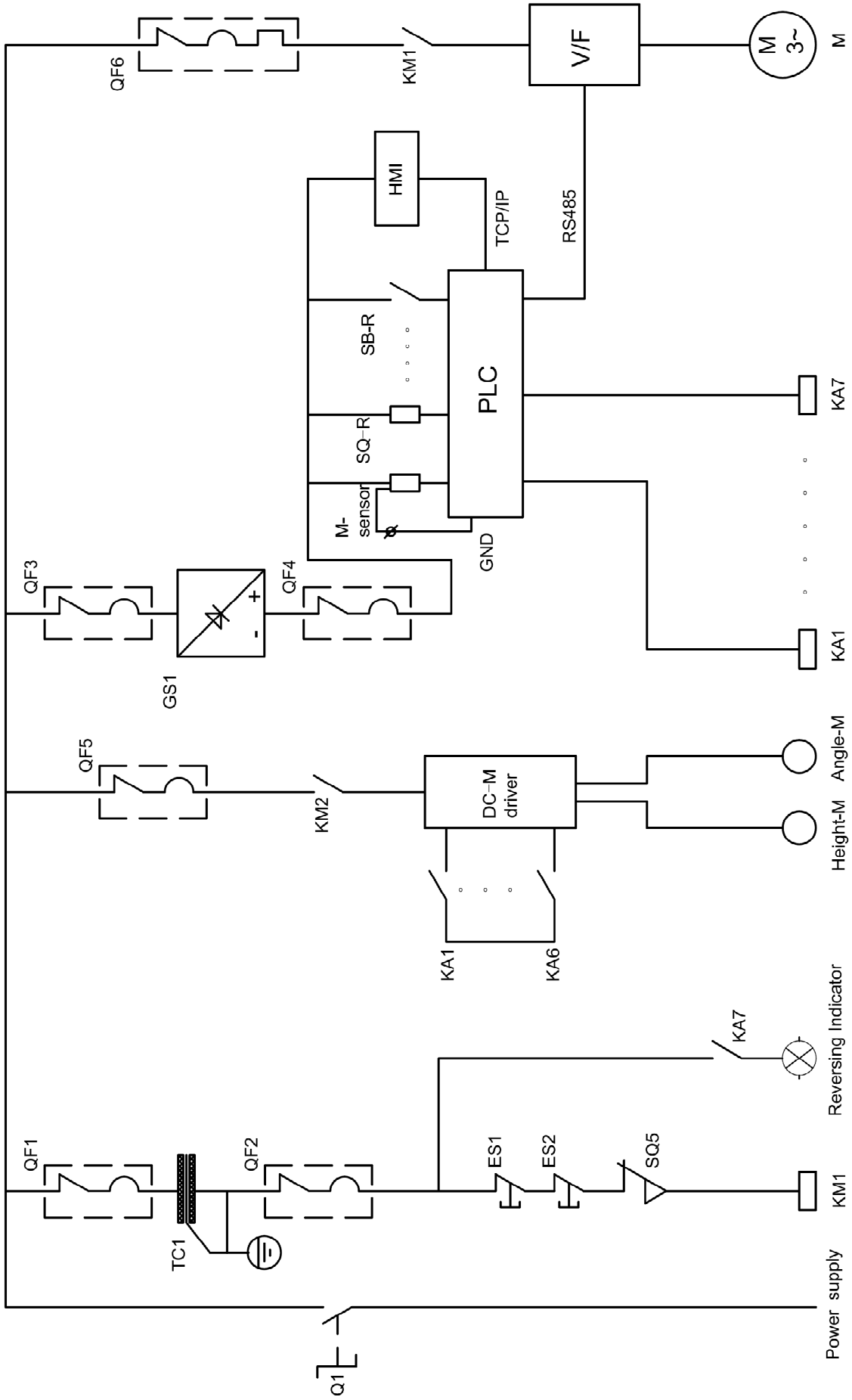

6. Adjustment

⚠ NOTICE

Before operation, the machine should be carefully adjusted for best performance.

6.1 Sliding Table (*Fig. 23 & Fig .24)*

1. Bring the two fences closely together and adjust them to be coplanar.
   (The parallelism of two fences has been adjusted at factory and the deviation should be no more than 0.1mm)
2. Slide the sliding table and use a dial indicator to measure the parallelism as shown in ***Fig.23***
3. If no more than 0.1mm, the parallelism is correct. If not, continue with the next steps.
4. Loosen secure nuts under sliding table completely and tighten them by hands.
5. Loosen nuts (B), see ***Fig.24.***
6. Turn the thread rod (C) out or in.
7. Push sliding table to ensure that the block (A) is against the thread rod (C).
8. Repeat step 2 and 3, until the parallelism is correct;
9. Tighten screw (B) and the locking nuts of the sliding table.

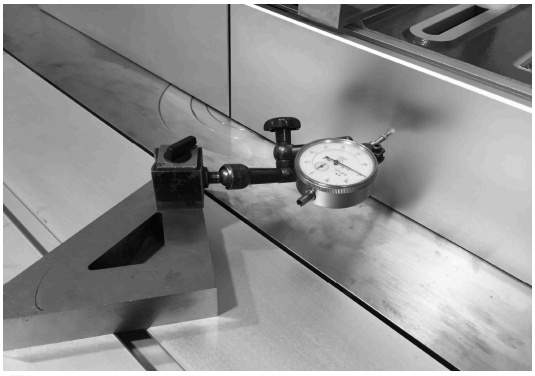

Fig.23

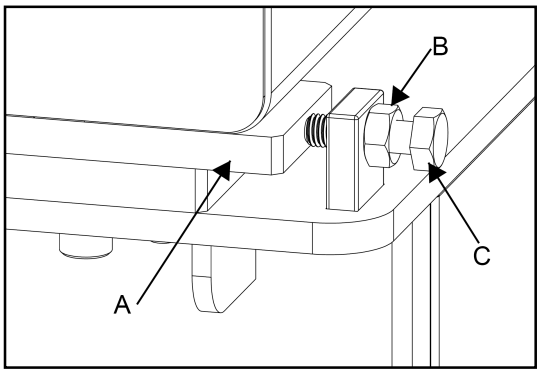

Fig.24

6.2 Main Table & Table Insert

The main table should be about 0.1mm lower than sliding table.
1, Using a straightedge and feeler gauge to check if the main table need to be adjusted. If yes, continue the next steps.
2, There are four bolts supporting the main table on four cabinet corners. Loosen A and B, and turn bolt (C) for height adjustment ***Fig.25.***
3, Repeat step 1 until the main table is 0.1mm lower than the sliding table.
4, Secure (A) and (B).

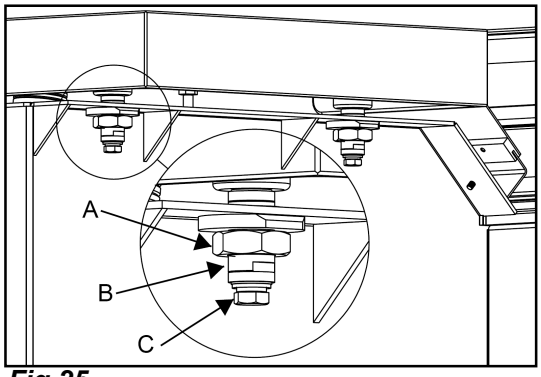

Fig.25

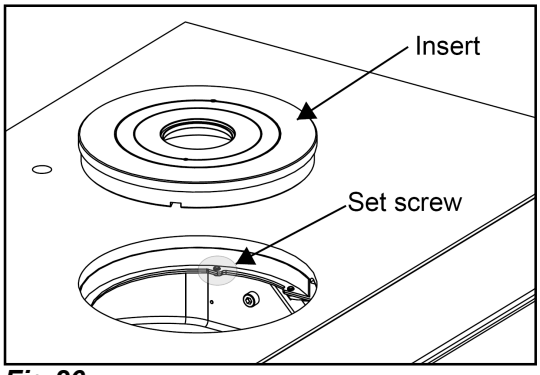

Fig.26

Table Insert:

The table inserts are pre-installed at the factory. The top surface of the insert is level with the table surface. If any adjustment is necessary, turn the set screws (4PCS) in or out to adjust the insert, as ***Fig.26***.

6.3 Cross-Cut Fence

Square to Fence:

The crosscut fence or miter fence must be set 90 degree to the fence of the guard. Cut a 1000x1000mm MDF or similar material with the thickness of at least 15mm by 5 times. (Put the last cutting side against the fence for the next cut, keep turning the testing piece in same direction). Measure the width differences between the 5th cut and the 3rd cut at both ends. The difference should be less than 0.75mm, see ***Fig.27.*** If not, adjust as chapter 5.4.3

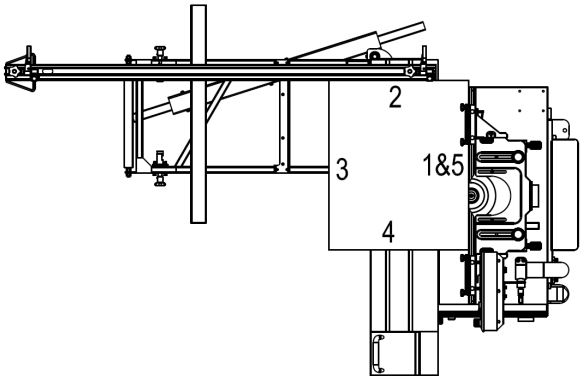

Fig.27

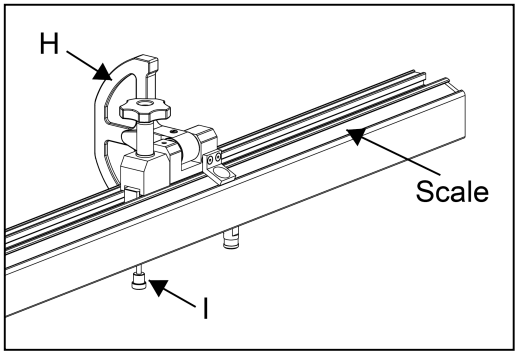

Fig.28

Adjustment of the Crosscut Fence Scale:

For the first time to use the fence or replace the cutter, the scale must be re-adjusted:

Set the stop plate (H) ***(Fig.28)*** at a certain location and cut a piece of workpiece.

a. Measure the length of the workpiece, release the little knob (I) ***(Fig.28)***under the fence, adjust the location of the scale to fit the length you measured, confirm the scale's location and lock the scale by turning the knob (I)。

b. Adjust the inner scale by the same way as above.

7. Operations

⚠ NOTICE

Machine operation may cause injury of operator. Before regular work, we recommend you get the knowledge of operations by using scrap lumber to check settings. Read instructions before you start cutting. Always pay attention to safety cautions to avoid personal injury.

7.1 Electrical Operations *(Fig.29)*

7.1.1 Switch & Button:

A: Start the main motor and make the spindle rotate **anticlockwise.**

B1&B2: Stop buttons—stop the main motor.

C1&C2: Emergency stop buttons—disconnect the power of all motors.

D: Main power switch—connect or disconnect the power.

E: Power indicator—when power is supplied, the power indicator will be on.

F: Caution light—when the spindle turns clockwise, the caution light is **YELLOW.**

G: Select switch—this switch has three positions：“CCW” “CW” & “Middle position”. When you adjust the cutter, the switch must be positioned in the middle.

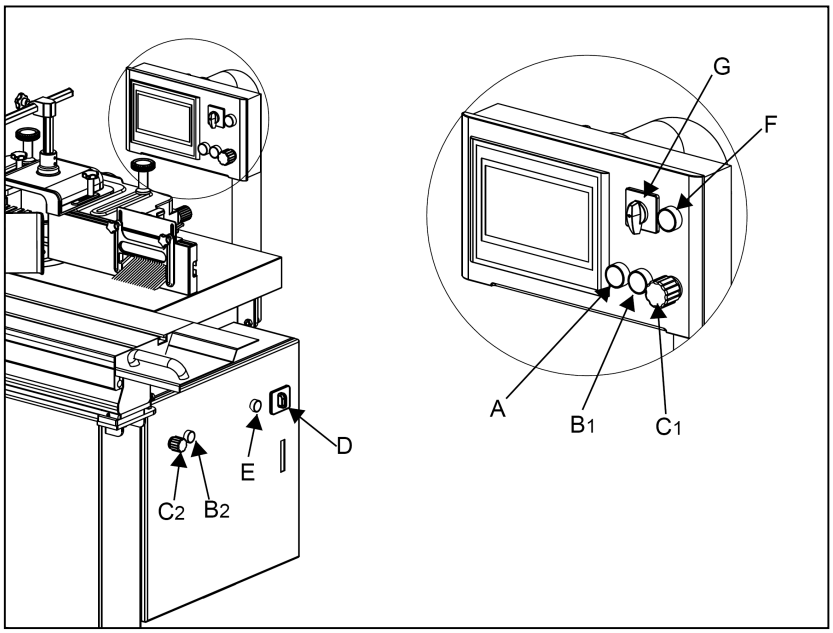

Fig.29

7.1.2 Display control unit (Touch Screen)

When you power on the machine, the Touch Screen will show as ***Fig.30***, the “WARNING!” is very important for both the operator and the machine.
Press the key “SKIP” to enter into the interface as shown in ***Fig.30*** the “WARNING!” is very important for both operator and machine.
Press key “SKIP” to the main interface; as ***Fig.31***

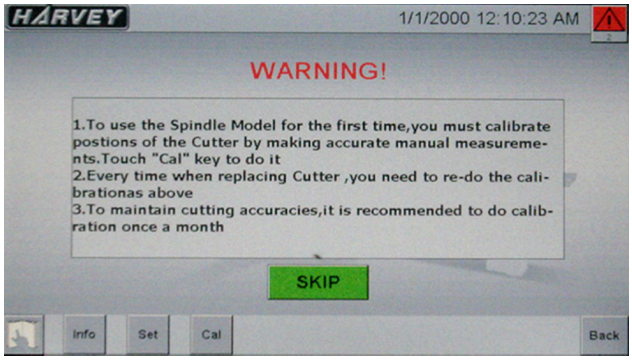

Fig.30

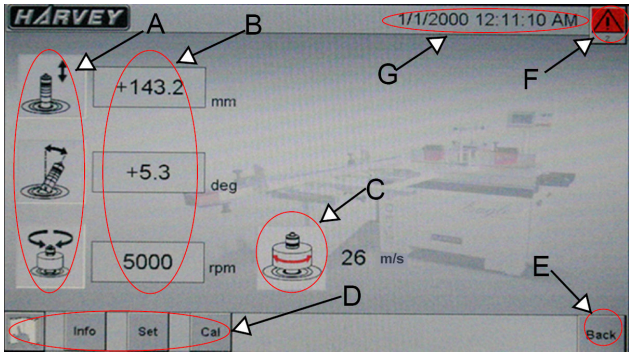

Fig.31

7.1.2.1Basic introduction of main interface (Fig.31)

Zone A: Press the keys to adjust the height, tilt, and speed of the spindle
Zone B: Show the positions and speed of the spindle.
Zone C: Show the cutter linear speed of the spindle.
Zone D: Press the keys to set up, calibrate, and show operation record and manual.
Zone E: In some cases, you can touch “Back” to return to the main interface directly.
Zone F: Alarm Indicator, you can touch it to get the alarm information.
Zone G: Date and time display.

⚠ NOTICE

When use the machine for the first time, you need to follow the section of “7.1.2 Calibration” firstly.

7.1.2.2 Height adjustment (Manual control)

After touch the **Height Adjustment** key, a separate control window will show on the right of the display, ***as Fig.32.*** Ensure that the selector switch (G) (see *Fig.29*) is in the middle position.

 Raise the spindle;

 Lower the spindle;

 Raise the spindle slowly;

 Return to the main interface;

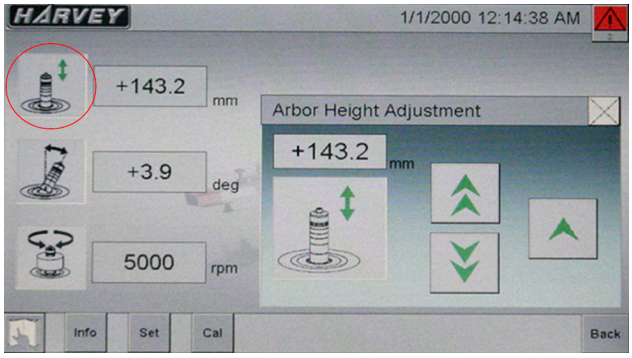

Fig.32

7.1.2.3Tilt Adjustment (Manual control)

After touch the **Tilt Adjustment** key, a separate control window will show on the right of the display, ***as Fig.33.*** Ensure the selector switch (G)(see Fig.29) is in the middle position.

Tilt the spindle to 90 degree;

Tilt the spindle to 45 degree;

Tilt the spindle to 90 degree slowly;

Return to the main interface;

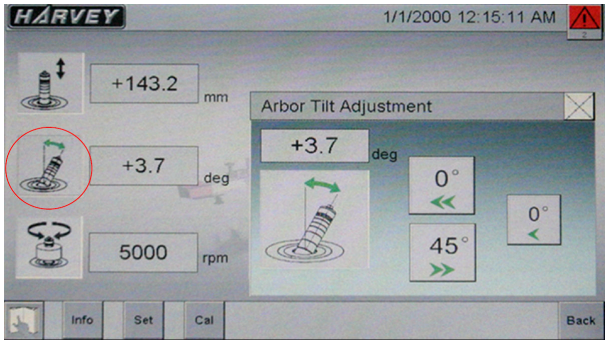

Fig.33

7.1.2.4 Spindle speed adjustment (Manual control)

After touch the **Speed Adjustment** key (H), a separate control window will show on the right of the display, ***as Fig.34.*** After touch the key (**I**) (***as Fig.34),*** the keypad will be shown in the middle of the screen, enter the desired speed and confirm by pressing "**OK**" to get the desired speed.

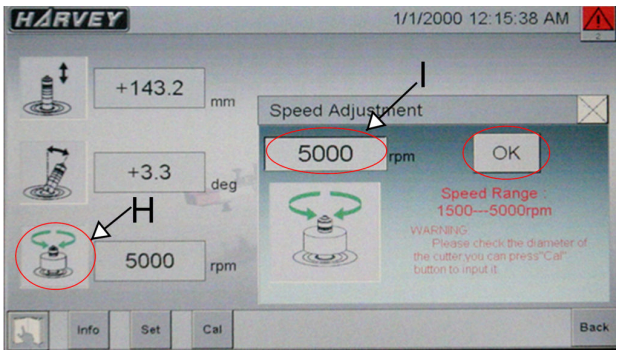

Fig.34

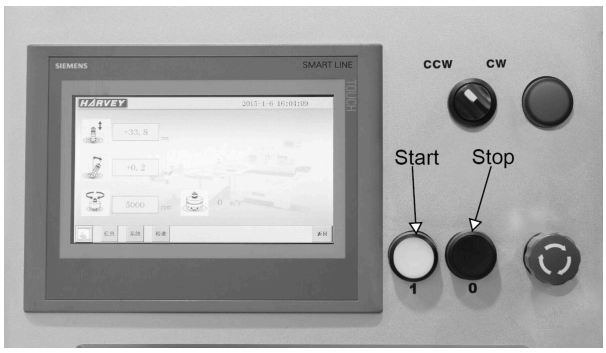

Fig.35

Press **START** button to rotation the spindle, press **STOP** button to stop, as ***Fig. 35.***

⚠ NOTICE

While the spindle is rotating, speed can be adjusted directly.
When you enter the desired speed, please pay attention to the "Speed Range" warning as Fig.34.
There are two speed ranges of this machine:1500-5000 and 3000-10000, **please see chapter.7.4** ***to*** **change the speed range.**

7.1.2.5 Calibration

⚠ NOTICE

1. **To use this machine for the first time, you must calibrate the positions of the spindle by making accurate manual measurements. You need to touch the "Cal" key to do it.**
2. **After replacing spindle, you need to re-do the calibration;**
3. **It is recommended to do the calibration once a month.**

1. Basic Setting (***Fig.36)***

After touch the **Set** key, a separate control window will show in the middle of the display;
Touch the touch field to set the language;
Touch the touch field to select "mm" or "inch" directly;
Touch the touch field to set the time & date;

Press **Back** to return to the main interface;

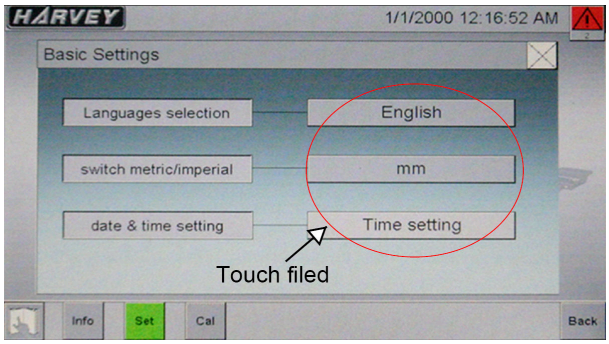

Fig.36

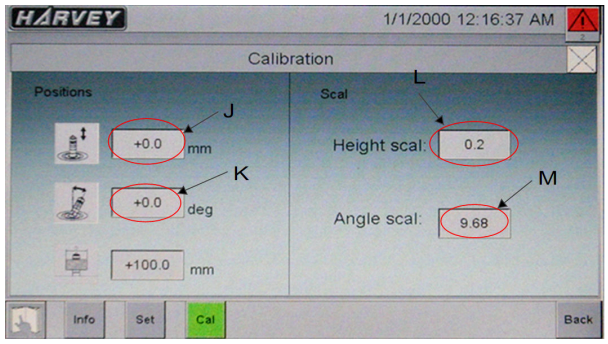

Fig.37

2. Angle Calibration

Tilt the spindle to any angle, measure the angle directly or cut a block to measure it.

After touch the **Cal** key, a separate control window will show in the display, as ***Fig.37,*** then touch the key **K**, the keypad will be shown in the middle of the screen, enter the angel you measured, and confirm it by pressing "**Enter**";
Press **Back** to return to the main interface;

3. Height calibration

Make the spindle up or down to any height, measure the blade height directly or cut a block to measure it.
After touch the **Cal** key, a separate control window will show in the middle of the display, as ***Fig.37,*** then touch "**J**" field, the numeric keypad window are shown in the middle of the screen, enter the value you measured, and confirm with "**Enter**";
Press **Back** to return to the main interface;

⚠ NOTICE

Height Scale (L) and Angle Scale (M) have been set up at factory, do not adjust it.

7.1.2.6 Operation Records *(Fig.38)*

After touch the **Info** key, a separate control window will show in the display, according to this information, you can clear the total operation data of your machine.

Press **Back** to return to the main interface;

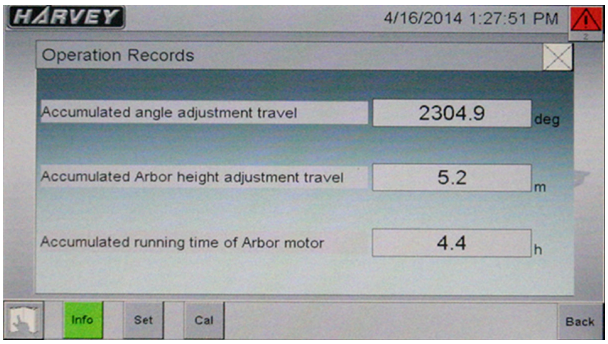

Fig.38

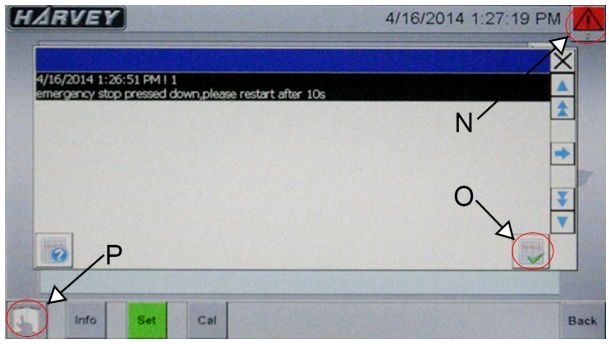

Fig.39

7.1.2.7 Alarm *(Fig.39)*

As ***Fig.39*** shown, is the alarm info, when there are alarms, key “N” will twinkle, touch it to get the warning information, if the alarm is relieved, can press “O” to clean the record

7.1.2.8Manual *(Fig.39)*

Touch the  key (P), a separate control window will show in the display, you can read the operational manual information here.

Press **Back** to return to the main interface.

7.2 Cutter Installation/Changing *(Fig.40)*

a. Raise the spindle to the highest position and at 90 degree.
b. Push the sliding table and the yellow safe cover (F) all the way to the left.
c. Push the stop pin (E) to lock the spindle, use a wrench to unscrew the cap screw(A)
d. Remove the glands (B), the spindle washers (C) and the cutter (D).
e. Install the cutter and washers to the spindle.
f. Re-install the gland (B) and cap screw (A).
g. Push the stop pin (E) to lock the spindle, use a wrench to lock the cap screw (A)
h. Pull back the safe cover (F) all the way to the right.

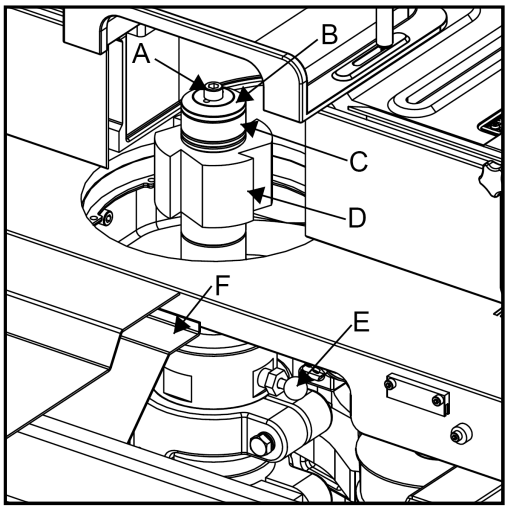

Fig.40

⚠ WARNING

1. ***You must install the cutter as shown in Fig.41 and lock the cap screw.***
2. ***Avoid installing the cutter as shown in Fig.42.***
3. ***The tightening torque of the cap screw (A) is about 30 Nm.***

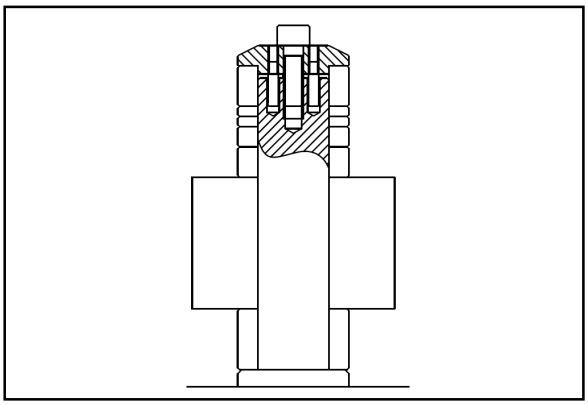

Fig.41

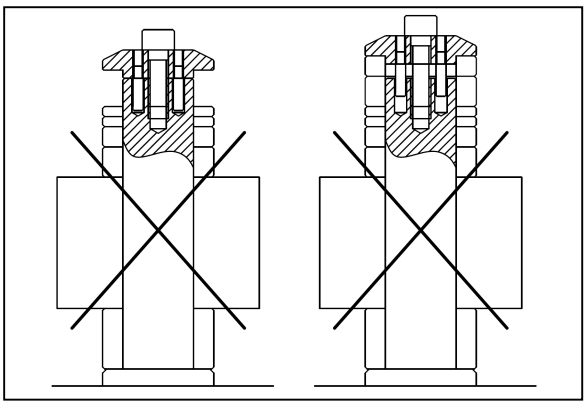

Fig.42

7.3 Replace the Spindle (*Fig.43)*

1. Push the sliding table and the safe door all the way to the left.
2. Turn the knob (A) anticlockwise, release the belt (B).
3. Take out the belt.
4. Loosen the screw (D).
5. Push and keep the knob (C) in the position, you can take out the spindle and replace it.

⚠ NOTICE

Knob (C) is a safety pin, always ensure that it is in the right position and working well.

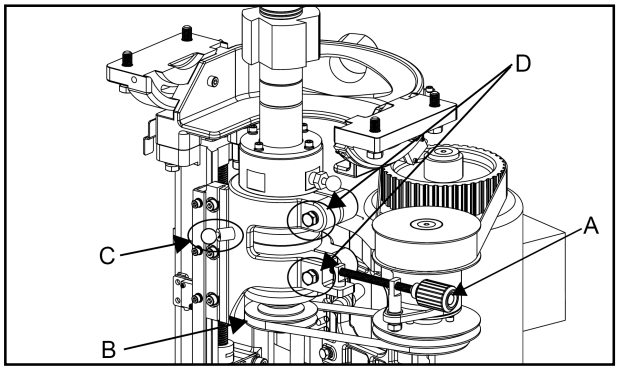

Fig.43

Tool Diameter(mm)	2800	3000	3500	4000	4500	5000	5500	6000	6500	7000	7500	8000	9000	10000
60	hazard-bad machining conditions													31
80												33	38	42
100									34	37	39	42	47	52
120							35	38	41	44	47	50	57	63
140						37	41	44	48	51	55	59	66	73
160					38	42	47	50	54	59	63	67	75	84
180				37	42	47	53	57	61	66	71	75	85	
200			37	42	47	52	59	63	68	73	79	84		
220		35	40	46	52	58	65	70	75	81		bursting hazard		

Change of Revolutions

Fig.44

7.4 Change the Speed Range (*Fig.44)*

There are two speed ranges of this machine: **1500-5000 and 3000-10000 RPM.**
There are 2 step pulleys on both of the spindle and the excessive shaft, the belt can be moved from one step on the pulley to the other one by releasing the knob (A) as shown in ***Fig.44***,
This diagram shows the optimum speed corresponding to a particular tool diameter and cutting speed as shown in ***Fig.44***.

Cutting Speed

The linear cutting speed should be selected from 40 m/s to 70 m/s to minimize the risk of kickback. Cutting speed is related to the wood properties, shapes and worker's habits. The user can calculate the approximate cutting speed based on the following formula:

$$V = \frac{K \cdot b \cdot e_1 \cdot v_H}{P}$$

In this formula: V — Cutting speed (m/s)
b — Cutting height of wood (mm)
e_1— Cutting thickness of wood (mm)
V_H— Feeding speed (m/s)
P — Power (Kw)
K — Unit cutting resistance (N/mm^2)

Usually, the value K depends on the direction of the wood fiber, the type of wood, the shape of the cutter and so on. The K value can be written as the following formula:

$$K = K_c \cdot K_g \cdot K_o \cdot K_B$$

Kc — The basic cutting coefficient related to the cutting type;

Cutting Type	Cutting Angle					
	45°	50°	60°	70°	80°	90°
End Grain Cutting	1.75	2.1	2.5	3.5	4.4	5.3
Rip Cutting	0.5	0.7	1.0	1.4	1.85	3.0
Cross Cutting	0.3	0.31	0.33	0.35	0.45	0.6

Kg — Resistance coefficient of different tree species;

Tree Species	Kg	Tree species	Kg
Pine Tree	1	Birch	1.25
Spruce	1	Oak	1.7
Dahurian Larch	1.1	Beech	1.5
Poplar	0.85	Bass	0.8
0thers	1		

Ko — Consider the coefficient of the sharpness of the cutter;

Working Hour	0	1	1.5	2	3	4	5	6
Ko	1	1.2	1.25	1.3	1.4	1.5	1.6	1.7

K_B — Coefficient taking into account wood humidity;

Wood state	Humidity	K_B	Wood State	Humidity	K_B
Very dry	5-8%	1.1	Newly Milled	50-70%	0.89
Dry	10-15%	1.0	Transported in Water	＞70%	0.87
Air dry	20-30%	0.93			

7.5 Correct Use

⚠ WARNING

For the operator's safety, the correct processing method must be operated according to the *Fig.45.*

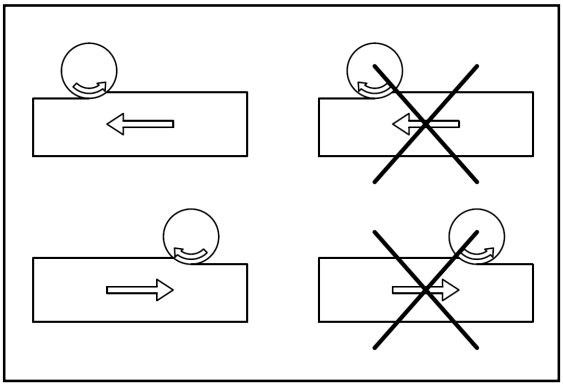

Fig.45

7.6 Digital Readout of Fence Angle Operation *(Fig.46)*

ON/OFF Turn on or turn off this digital readout.

ZERO Digital readout date reset.

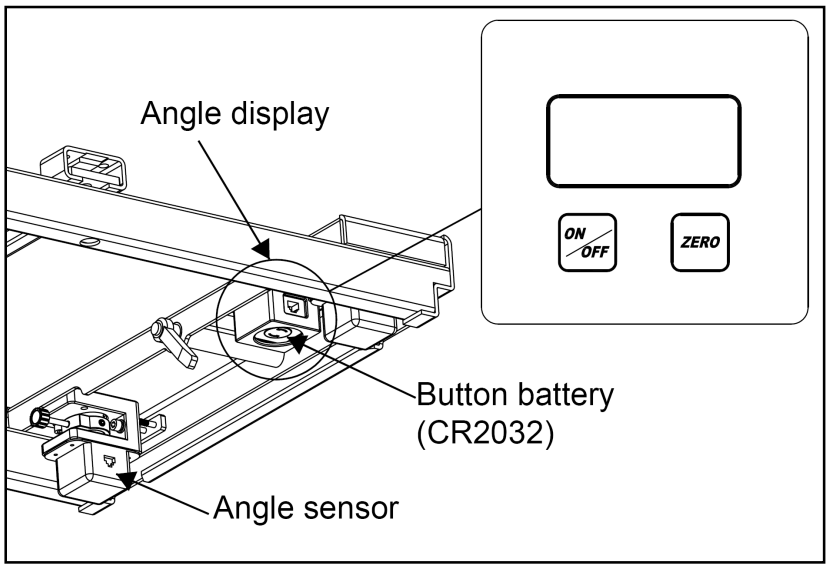

Fig.46

8. Maintenance

⚠ WARNING

Always disconnect the power to the machine before maintenance. Failure to do this may result in serious personal injury.

8.1 Cleaning

Cleaning this machine is relatively easy. You can use the vacuum to collect the wood chips and dust, and also wipe off the dust with a dry cloth to avoid the risk of fire. If any resin has built up, use a resin dissolving cleaner to remove it. Treat all the cast iron and unpainted steel with a non-staining lubricant after cleaning.

Once a Week:
——clean the sliding table surface and grooves, cast iron main table, the fence and sliding grooves, the tilt segments, machine interior and environment.

8.2 Lubrication:

Spindle Shaft:
No lubrication for the spindle shaft bearing is required;

Height adjustment / Tilt adjustment (***Fig.47***)
Lubricate once a month:
——Trunnions (A), two sides.
——lead screw (B).
——Dovetail groove (C), two sides.

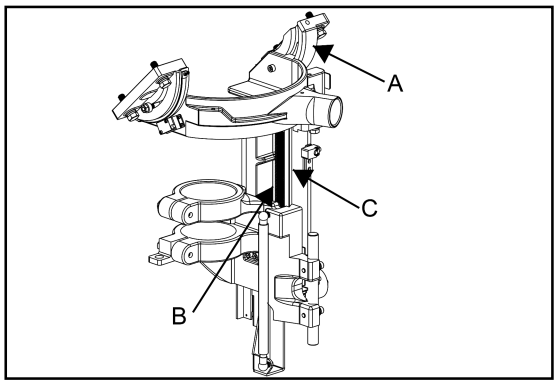

Fig.47

8.3 Replacing Belt:

1. Push the sliding table and safety door all the way left.
2. Release the knob (A), you can replace the belt (B), as ***Fig.48***.
3. Open the back cover, you can find belt (E), release (G) & (F), you can replace the belt (E), as shown in ***Fig.49***.

⚠ NOTICE

It is very important to ensure the parallelism between the motor arbor and transition arbor, turn the screw (F) in or out, you can adjust the parallelism.

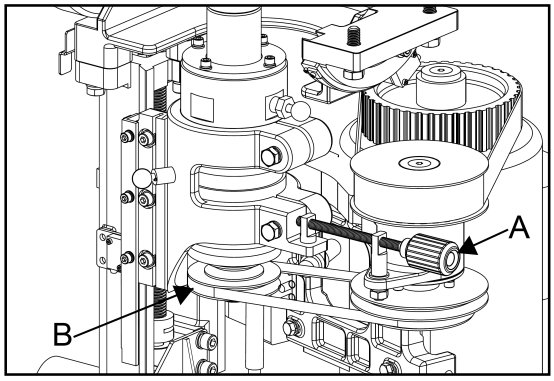

Fig.48

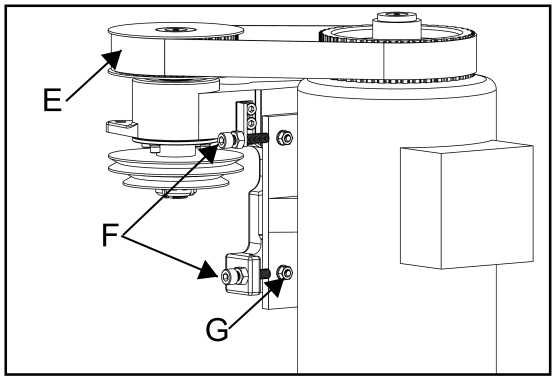

Fig.49

9. Parts List

Table Assembly

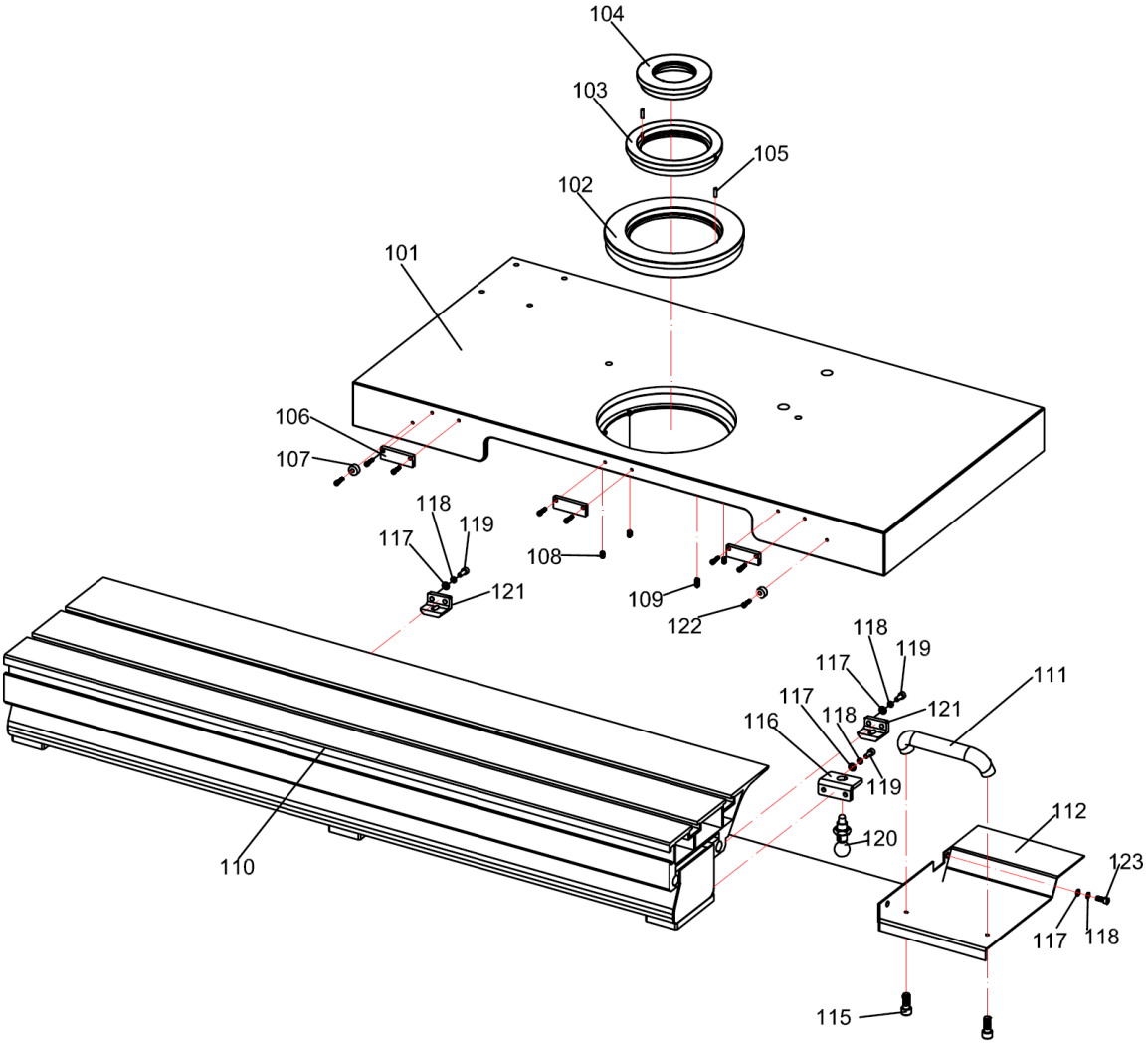

REF	DESCRIPTION	REF	DESCRIPTION
101	Main table	112	Draw handle
102	Table insert A	115	Cap screw M10x16
103	Table insert B	116	Holder
104	Table insert C	117	Flat washer 6
105	Pin 4 x 16	118	Spring washer 6
106	Bracket	119	Cap screw M6x20
107	Support block	120	Anti back off
108	Set screw M6x8	121	Limited stop
109	Set screw M6x12	122	Cap screw M5x16
110	Sliding table	123	Cap screw M6x16
111	Handle		

Cabinet

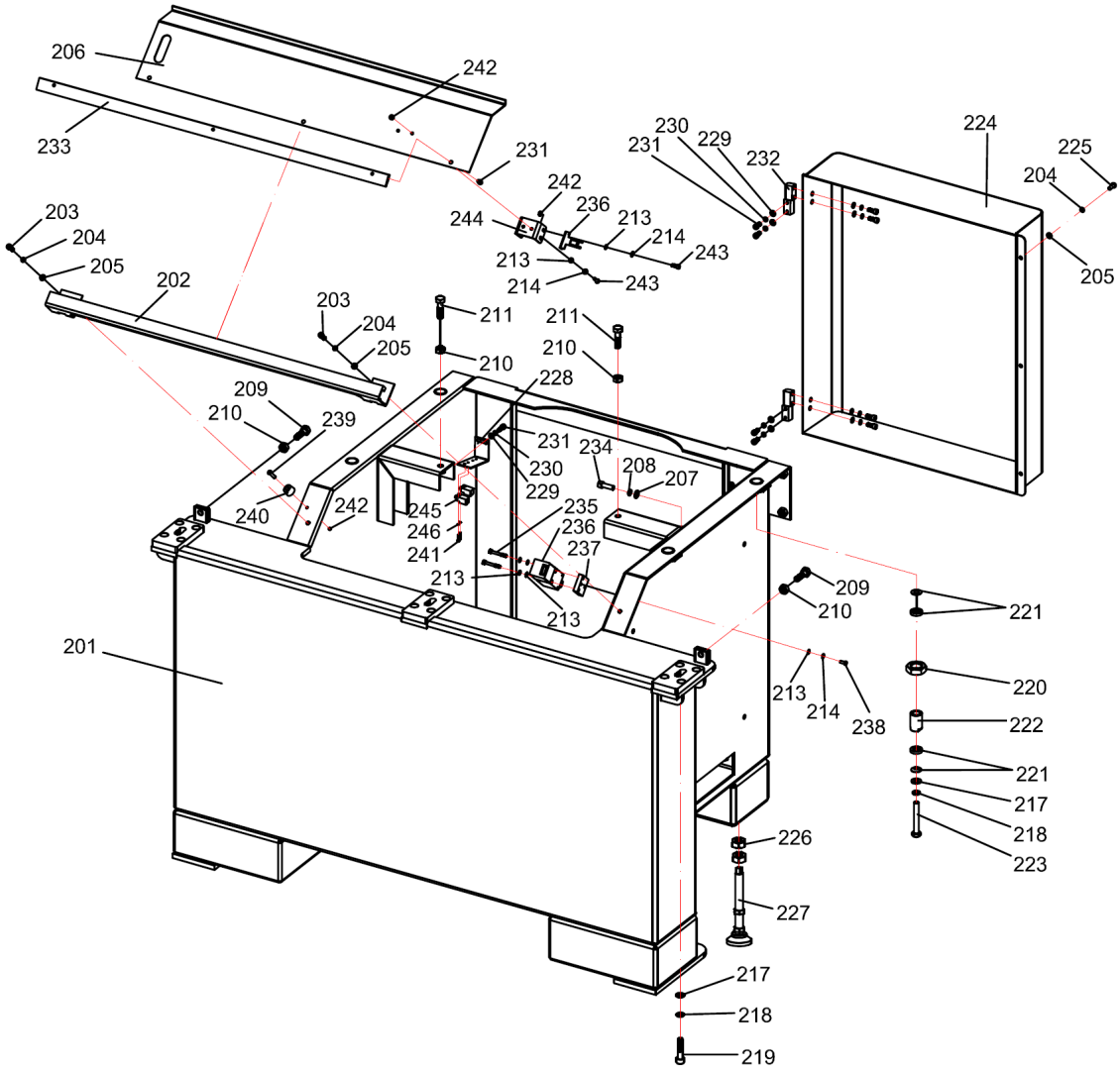

REF	DESCRIPTION	REF	DESCRIPTION	REF	DESCRIPTION
201	Cabinet	219	Cap screw M10x45	234	Cap screw M8x12
202	Fixation	220	Thin nut M24x2	235	Cap screw M4x30
203	Cap screw M6x12	221	Spherical washers	236	Safety limit switch
204	Spring washer 6	222	Adjusting nut	237	block
205	Flat washer 6	223	Hex bolt M10x70	238	Pan HD screw M4x12
206	Safe doors	224	Back cover	239	Pan HD screw M4x16
207	Flat washer 8	225	Pan HD screw	240	Rubber block
208	Spring washer 8	226	Nut M16	241	Cap screw M3x20
209	hex bolt M10x35	227	Feet	242	Hex nut M4
210	Nut M10	228	Fixing plate	243	Cap screw M4x12
211	Hex bolt M10x45	229	Flat washer 5	244	Bracket
213	Flat washer 4	230	Spring washer 5	245	Proximity switch
214	Spring washer 4	231	Cap screw M5x12	246	Flat washer M3
217	Flat washer 10	232	Hinge		
218	Spring washer 10	233	Safety door vane		

Elevation

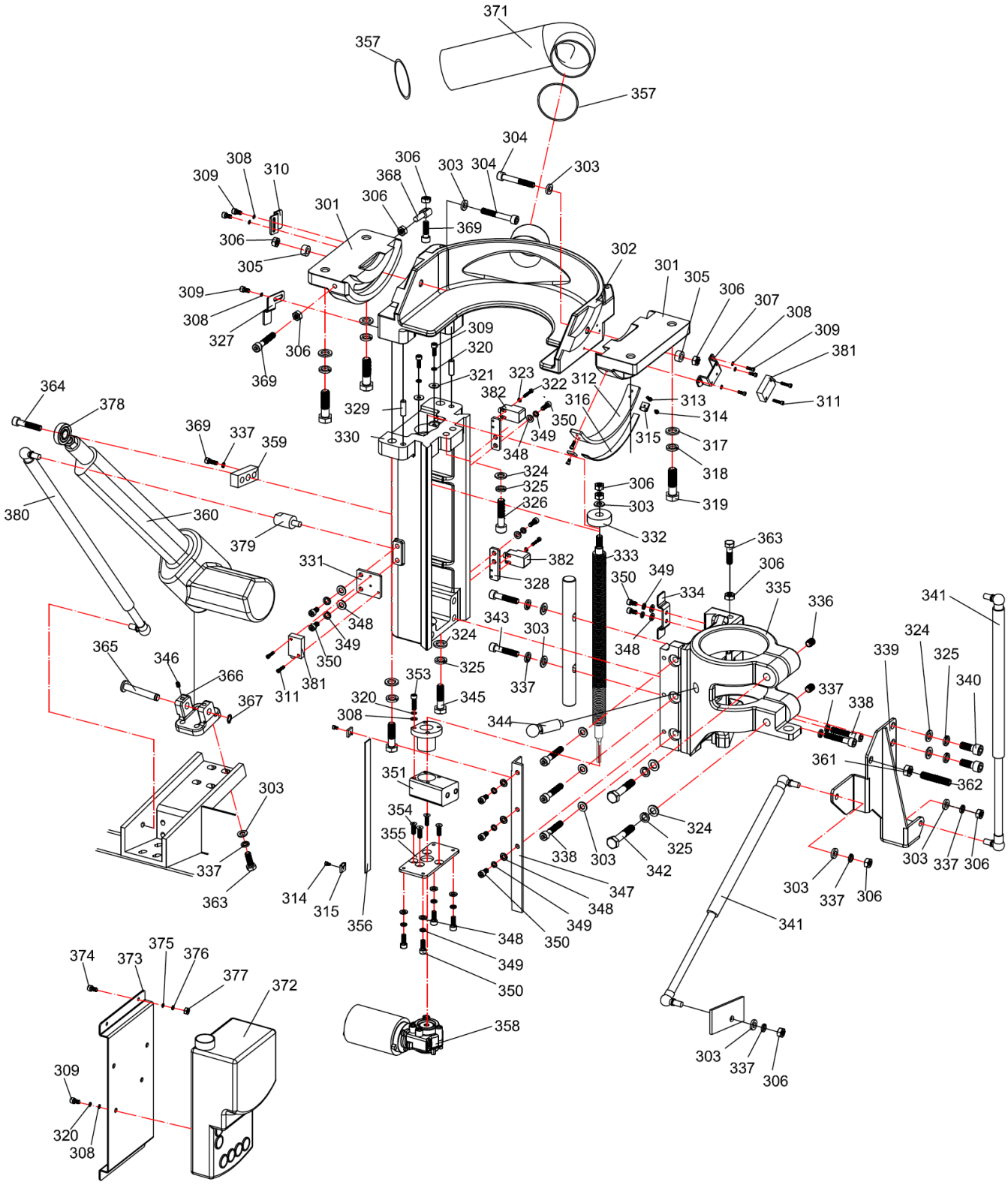
371
357
357
304
308
310
309
306
368
303
304
303
306
301
369
306
305
302
301
305
306
307
308
309
381
309
308
327
306
369
309
320
321
323
322
312
316
313
314
311
364
378
329
382
350
349
315
317
369
337
359
330
348
318
324
325
326
306
303
319
380
360
379
332
363
331
382
333
306
328
350
349
334
335
336
341
348
343
303
324
348
349
350
365
346
366
325
353
337
339
324
325
340
367
311
381
320
345
337
338
308
344
361
362
351
303
354
355
324
325
338
303
342
337
363
314
315
356
347
348
349
350
303
337
306
303
337
306
341
348
349
350
374
373
375
376
377
372
358
309
320
308
303
337
306

Elevation Parts List

REF	DESCRIPTION
301	Ear slot
302	Dust cover
303	Flat washer 8
304	Cap screw M8x60
305	EPU washer
306	Nut 8
307	Fixing plate
308	Flat washer 5
309	Cap screw M5x12
310	Stop piece
311	Cap screw M3x16
312	holder
313	Cap screw M5x10
314	Cap screw M3x6
315	briquetting
316	Magnetic grid scale
317	Flat washer 12
318	Spring washer 12
319	Hex bolt M12x45
320	Spring washer 5
321	Big flat washer 5
322	Cap screw M3X20
323	Flat washer 3
324	Flat washer 10
325	Spring washer 10
326	Cap screw M10x45
327	Stop piece
328	Holder
329	Cylindrical pin
330	Lifting frame
331	Holder
332	Bearing 6301
333	Enhance the screw
334	Stop piece
335	Slider
336	Set screwM10x12
337	Spring washer 8
338	Cap screw M8x45
339	Fixation
340	Cap screw M10x20

REF	DESCRIPTION
341	Gas spring 200N
342	Hex bolt M10x55
343	Cap screw M8x40
344	Anti back pin
345	Hex bolt M10x45
346	Set screw M6x6
347	Holder
348	Flat washer 6
349	Spring washer 6
350	Cap screw M6x16
351	Slider connection block
353	Cap screw M5x20
354	Sunk screw M6x8
355	Fixing plate
356	Magnetic grid scale
357	Buckle
358	Motor
359	connection block
360	putter
361	Nut 10
362	Set screw M10x65
363	Hex bolt M8x20
364	Shoulder screw 12-16
365	Rotation pin
366	Support frame
367	Circlip 10
368	connection block
369	Cap screw M8x25
371	Straws
372	Drive
373	Drive support frame
374	pan HD screw M4x16
375	Flat washer 4
376	Spring washer 4
377	Nut M4
378	Joint bearing
379	Connection block
380	Gas spring 500N
381	Sensor
382	Proximity switch

Spindle

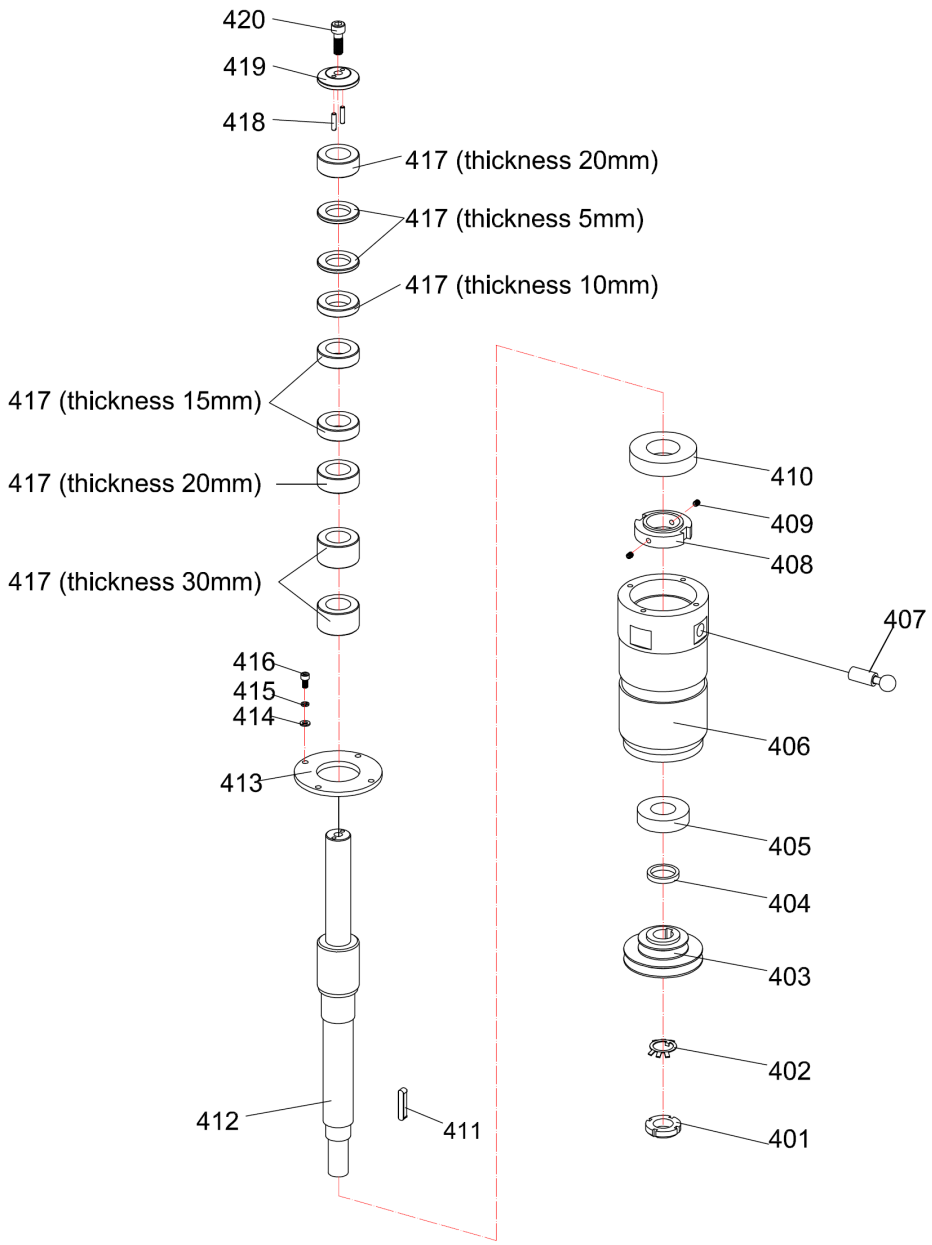

REF	DESCRIPTION	REF	DESCRIPTION
401	Nut M24x1.5	411	Flat key 8x7x22
402	Lock washer 24	412	Spindle
403	Pulley	413	Cover
404	Bushing	414	Flat washer 6
405	Bearing 6206	415	Spring washer 6
406	Housing	416	Cap screw M6x12
407	Stop pin	417	Spindle washer
408	Locking block	418	Pin
409	Set screw M6x8	419	Flange
410	Bearing 6208	420	Cap screw M10x30

Motor Assembly

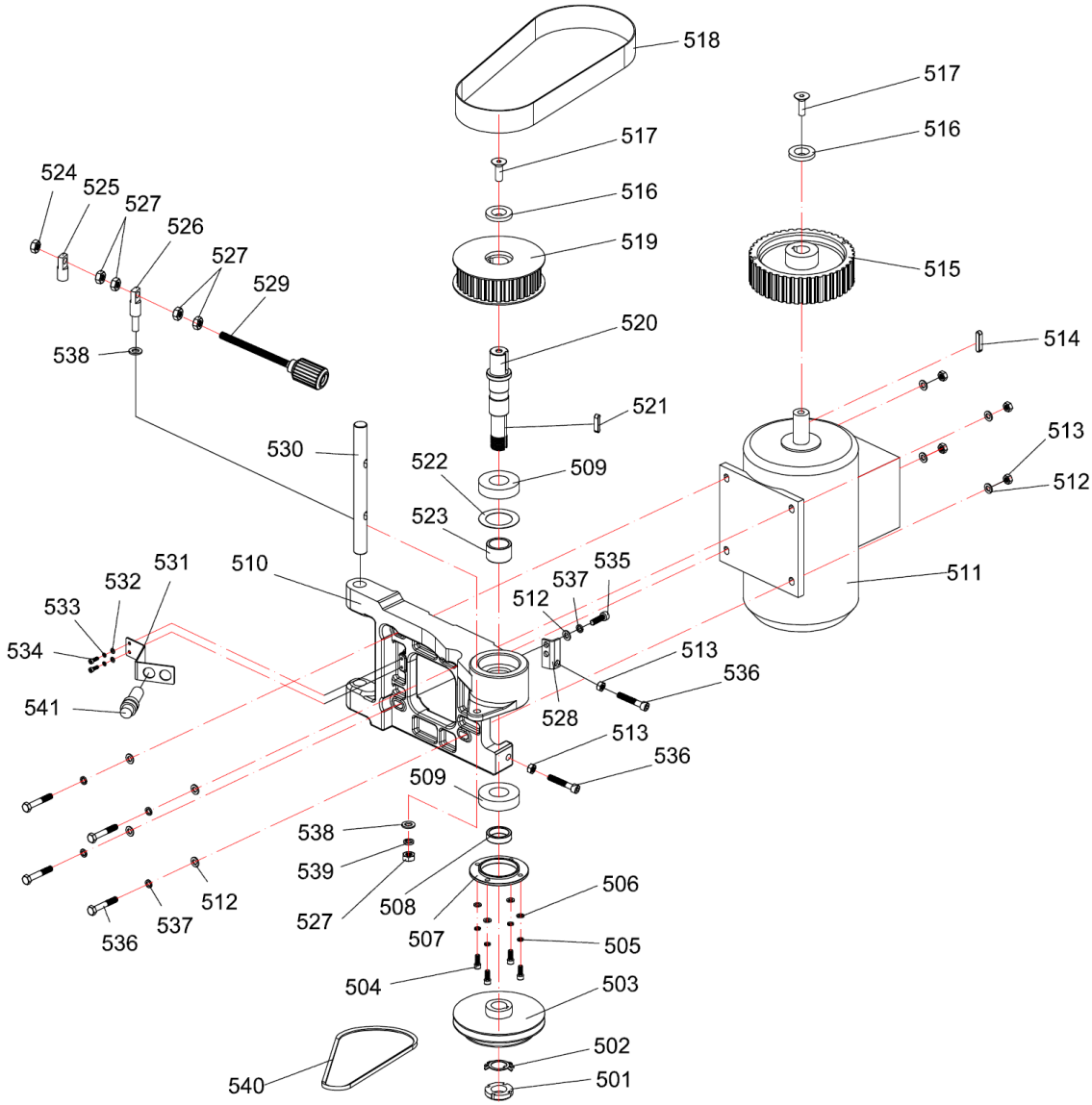

REF	DESCRIPTION	REF	DESCRIPTION	REF	DESCRIPTION
501	Nut M24x1.5	517	Flat HD screw	533	Spring washer 4
502	Lock washer 24	518	Timing belts	534	Cap screw M4x12
503	Belt pulley	519	Timing Pulleys	535	Hex bolt m8x20
504	Cap screw M6x16	520	Transition spindle	536	Hex bolt M8X50
505	Spring washer 6	521	Flat key 8x7x30	537	Spring washer 8
506	Flat washer 6	522	Spring stack	538	Flat washer 10
507	Cover	523	Bushing	539	Spring washer 10
508	Bushing	524	Anti back nut M10	540	Gates belt 11M730
509	Bearing 6206	525	Holder	541	Optoelectronic switch
510	Motor hanger	526	Holder		
511	Motor	527	Nut 10		
512	Flat washer 8	528	Sensor chip		
513	Nut	529	Adjustment knob		
514	Flat key	530	Rotating rod		
515	Timing Pulleys	531	Fixing plate		
516	Lock washer	532	Flat washer 4		

Crosscut Table

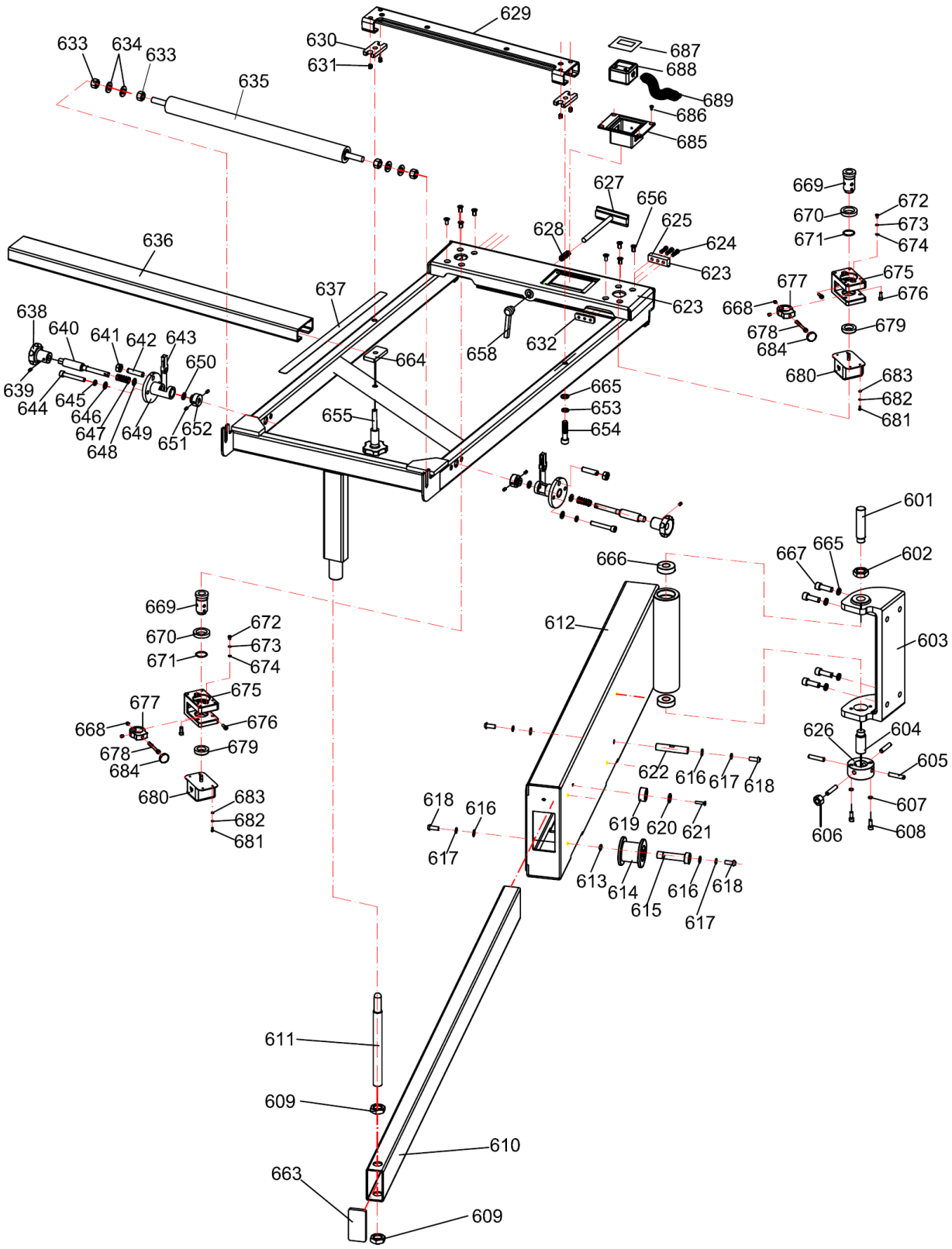

Crosscut Table Parts List

REF	DESCRIPTION
601	Shaft
602	Nuts M20
603	Rocker arm bracket
604	Shaft
605	Set screw M8x40
606	Nuts M8
607	Spring washer 6
608	Cap screw M6x25
609	Thin nuts M20
610	Slider
611	Supporting bar
612	Rocker arm
613	Circlip
614	Wheel
615	Wheel axle
616	Flat washer 8
617	Spring washer 8
618	Pan HD screw M8x16
619	Nylon block
620	Magnet
621	Sunk screw M5x25
622	Spacer pin
623	Workbench
624	Cap screw M5x20
625	Limit block
626	Support block
627	Locking block
628	Spring
629	Locking bracket
630	Briquetting
631	Set screw M6x12
632	Fixed block
633	Nut M12
634	Flat washer 12
635	Roller
636	Support bar
637	Transfer coating of splitting
638	Locking knob
639	Set screw M5X8
640	Locking shaft
641	Nut M10
642	Cap screw M10x40

REF	DESCRIPTION
643	Locking block
644	Cap screw M8x60
645	Flat washer 8
646	Spring washer 8
647	Spring
648	Locking block
649	supports
650	O -ring
651	Set screw M6x8
652	Spacer
653	Spring washer 10
654	Cap screw M10x25
655	Handle
656	Sunk screw M6x12
658	Lock lever
663	Cover
664	Fixing plate
665	Flat washer 10
666	Bearing 6203
667	Cap screw M10x40
668	Set screw M5X8
669	Rotating shaft
670	Bearing 61805
671	Shaft ring 25
672	Pan HD screw M4x8
673	Spring washer 4
674	Flat washer 4
675	Bracket for rotating shaft
676	Cap screw M6x10
677	Positioning plate
678	Cap screw M5x45
679	Bearing 61804
680	Miter angle sensor
681	Cap screw M3x8
682	Flat washer 3
683	Spring washer 3
684	Knob
685	Bracket for angle display
686	Flat HD screw M4x8
687	Digital display sticker
688	Miter angle digital readout
689	Miter angle sensor cord

Guard

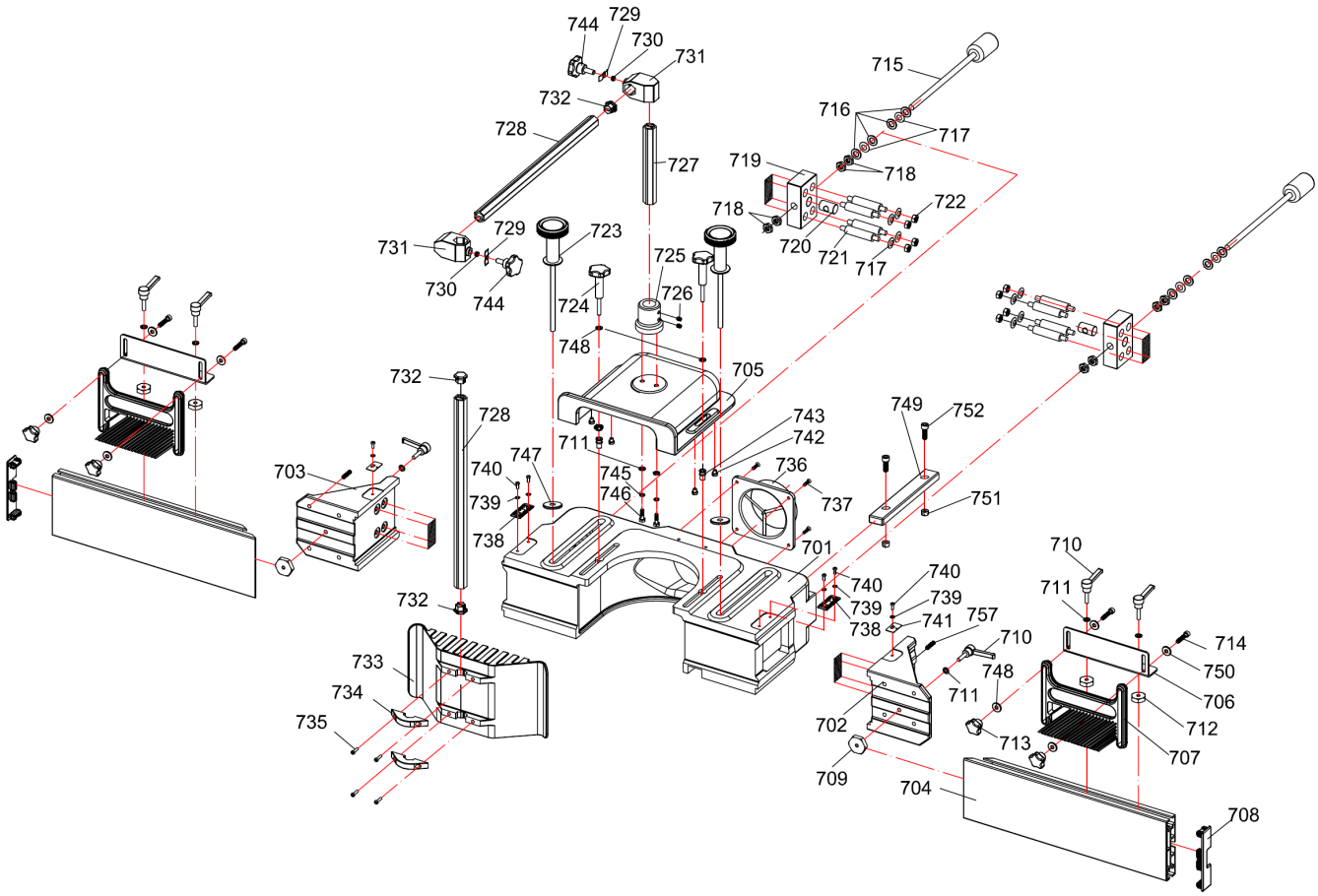

REF	DESCRIPTION	REF	DESCRIPTION	REF	DESCRIPTION
701	Hood	721	Bolt	741	Point
702	Right slider	722	Lock nut 8	742	Pin
703	Left slider	723	Bolt	743	Rivet nut 6
704	Fence	724	Lock knob	744	Knob
705	Top cover	725	Bracket	745	flat washer 6
706	Bracket	726	Set screw M6x8	746	Hex bolt M6x20
707	Keep back plate	727	Bar	747	Special washer
708	Fence cover	728	Bar	748	Special washer
709	Lock block	729	Slip sheet	749	Guide block
710	Lock lever	730	Set screw M8x6	750	Big flat washer 6
711	Flat washer 6	731	Block	751	Guide block
712	Lock block	732	Bar cover	752	Cap screw M8x16
713	Lock knob	733	Side guard	753	
714	Cap screw M6x30	734	Plastic block	754	
715	Adjust knob	735	Cap screw M4x12	755	
716	Flat washer 10	736	Dust hood	756	
717	belleville spring	737	Sunk screw M4x12	757	Set screw M6x8
718	Nut 10	738	Scale		
719	Lock block for	739	Flat screw 4		
720	Pin	740	Pan HD screw		

Crosscut Fence

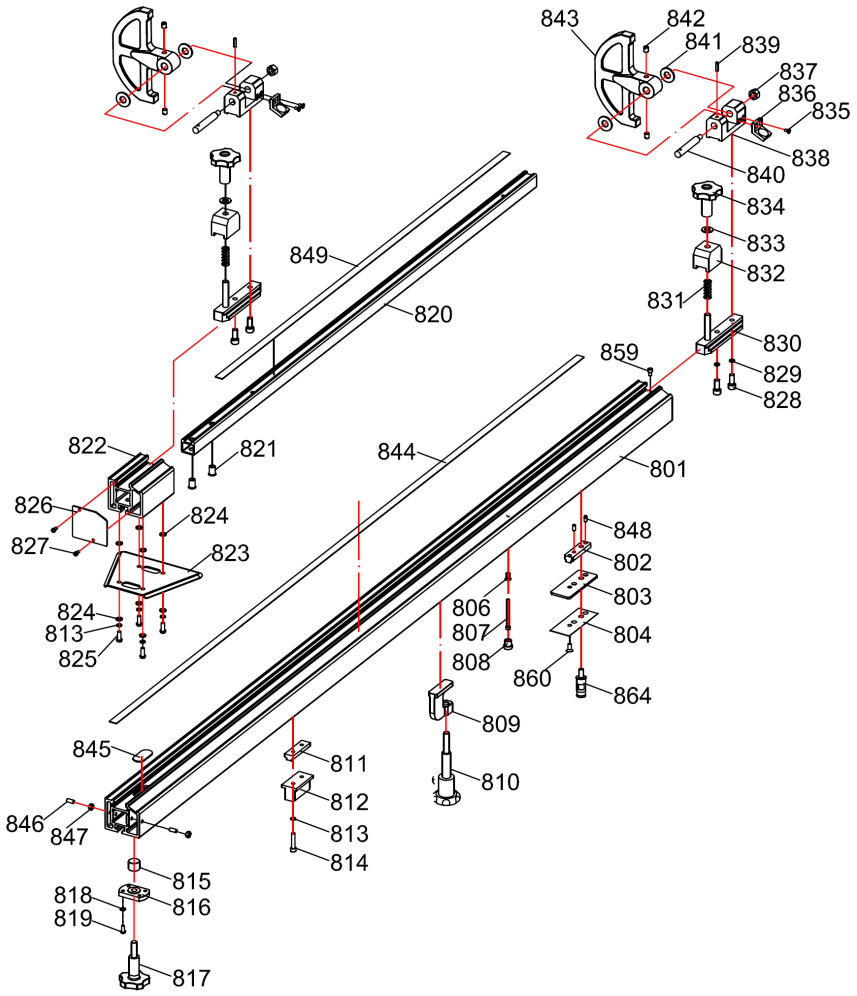

REF	DESCRIPTION	REF	DESCRIPTION	REF	DESCRIPTION
801	Crosscut Fence	819	Cap screw M5x16	836	window
802	Locking block	820	Core Ruler	837	Lock nut M8
803	Connection block	821	Rivet net	838	Fixed block
804	Transfer coating of splitting	822	Extend Fence	839	Set screw M5x30
806	Rivet net	823	Below Plate	840	Pin
807	Cap screw M5x65	824	Flat washer 6	841	Washer
808	Knob	825	Cap screw M6x16	842	Nylon screw
809	Locking block	826	Cover	843	Back board
810	Handle	827	Cap screw M4x8	844	Scale
811	T-block	828	Cap screw M8x20	845	window
812	Limit block	829	Spring washer 8	846	Set screw M6x12
813	Spring washer 6	830	T-oriented block	847	Nut 6
814	Cap screw M6x30	831	Spring	848	Set screw M6x12
815	Nylon Block	832	Impact Block	849	Scale
816	Lock Base	833	Flat washer 10	859	Cap screw M5x8
817	Handle	834	Handle	860	Flat Head Screw M6x8
818	Flat washer 5	835	Flat Head Screw M4x12	864	Connecting bar

Control Panel Assembly

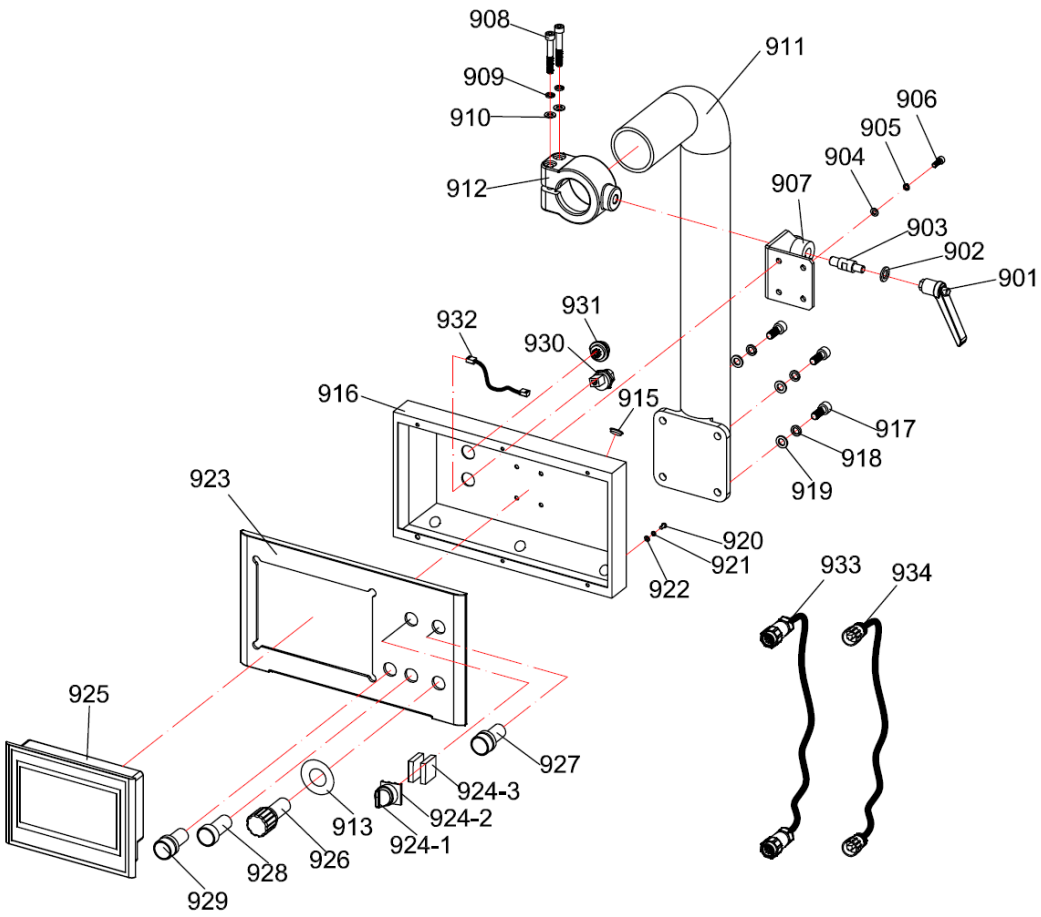

REF	DESCRIPTION	REF	DESCRIPTION
901	Lock lever	920	Pan HD screw M4x8
902	Flat washer 12	921	Spring washer 4
903	Locking shaft	922	Flat washer 4
904	Flat washer 6	923	Control panel
905	Spring washer 6	924-1	Head of Option Switch
906	Cap screw M6x12	924-2	Contact Switch Bracket
907	Fixing plate	924-3	Contact Switch
908	Cap screw M8x60	925	Touch screen
909	Spring washer 8	926	E-button
910	Flat washer 8	927	Light
911	Bracket	928	Stop button
912	Fixed bracket	929	Start button
913	Warning label	930	Ethernet port
915	Plug	931	12 Pins Connector
916	Back cover	932	8P Ethernet cable
917	Cap screw M10x20	933	Penal Control Cable（12 Pins）
918	Spring washer 10	934	Penal Control Cable（8 Pins）
919	Flat washer 10		

Harvey Industries Co., Ltd
68-10 Suyuan Avenue, Jiangning District, Nanjing 211100, China
www.harvey.cn/ www.gyroair.cn
Harvey Industries International Inc.
10830 Ada Ave. Montclair, CA. 91763
TEL: 1-800-253-3332
E-mail: info@harveywoodworking.com